READY TO RACE

890 ADVENTURE R 2023 EU 2023

ART.-NR.: F9703W7EN

KTM

All information contained is without obligation. KTM Sportmotorcycle GmbH particularly reserves the right to modify any equipment, technical specifications, prices, colors, shapes, materials, services, service work, constructions, equipment and the like so as to adapt them to local conditions or to cancel any of the above items, all without previous announcement and without giving reasons. KTM may stop manufacturing certain models without previous notice. KTM shall not be held liable for any deviations of availability and/or ability to deliver, illustrations, descriptions, printing and/or other errors. The illustrated models partly contain extra equipment, which is not applied to standard models.

© by KTM Sportmotorcycle GmbH, Mattighofen AUSTRIA; All rights reserved; Reprint, also in extracts, with written allowance of KTM Sportmotorcycle GmbH, Mattighofen only.

FRONT FORK, TRIPLE CLAMP

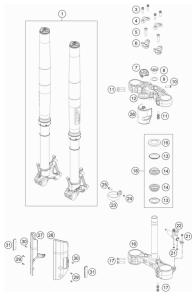

4

FRONT FORK DISASSEMBLED

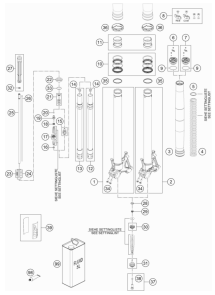

5

HANDLEBAR, CONTROLS

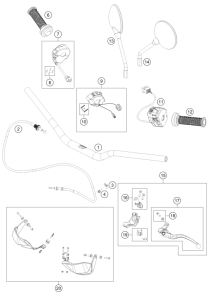

7

FRAME

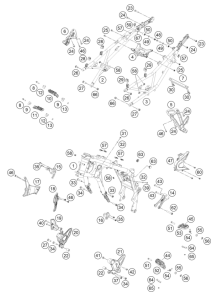

8

ENGINE GUARD

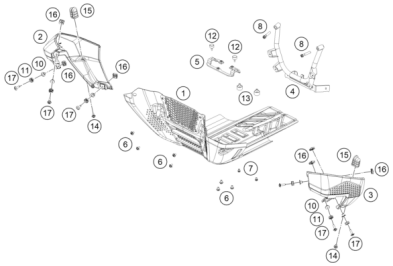

10

SIDE / CENTER STAND

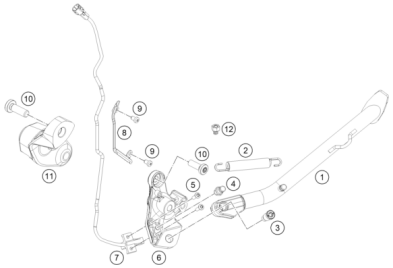

11

SHOCK ABSORBER

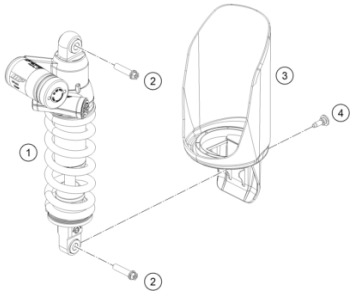

12

SHOCK ABSORBER DISASSEMBLED

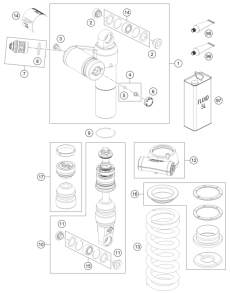

13

SWING ARM

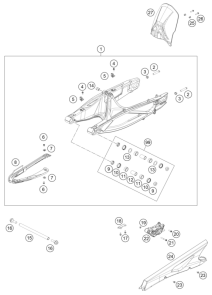

14

EXHAUST SYSTEM

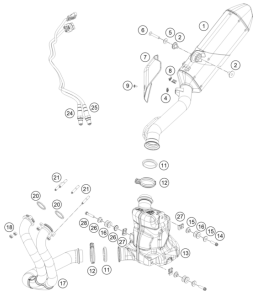

15

AIR FILTER

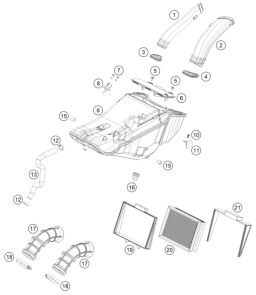

16

TANK, SEAT

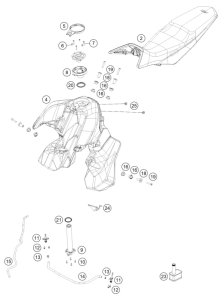

17

FUEL PUMP

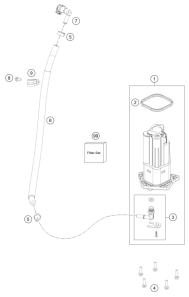

18

MASK, FENDERS

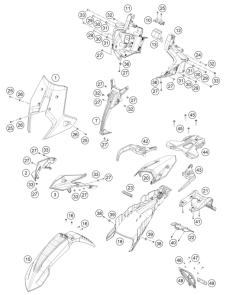

19

SIDE TRIM

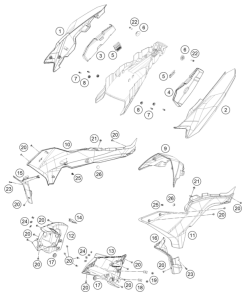

20

FRONT WHEEL

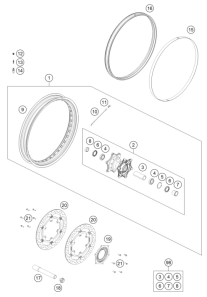

21

REAR WHEEL

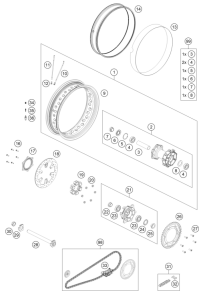

22

WIRING HARNESS

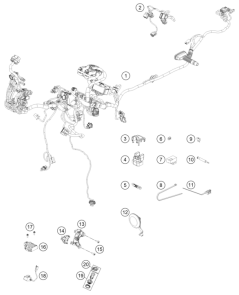

24

BATTERY

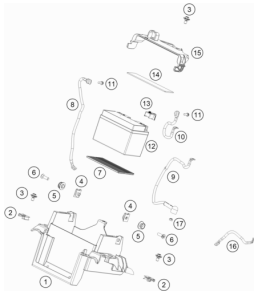

25

FRONT BRAKE CONTROL

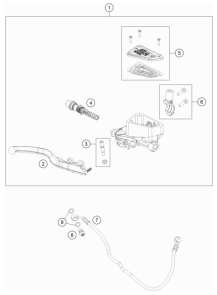

26

REAR BRAKE CONTROL

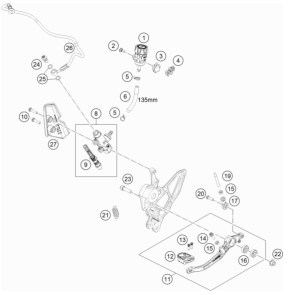

27

FRONT BRAKE CALIPER

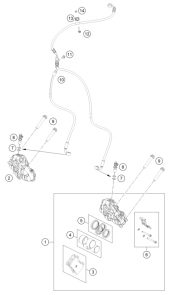

28

REAR BRAKE CALIPER

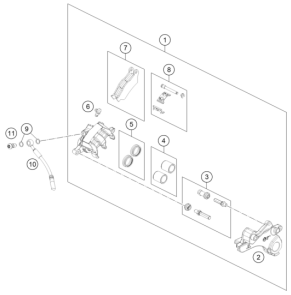

29

LIGHTING SYSTEM

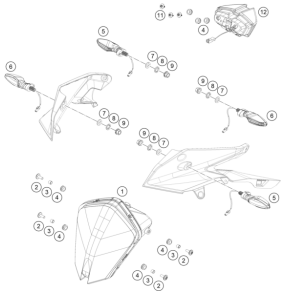

30

INSTRUMENTS / LOCK SYSTEM

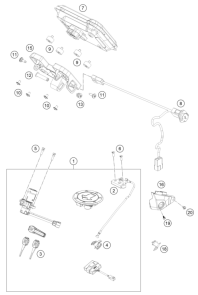

31

EVAPORATIVE CANISTER

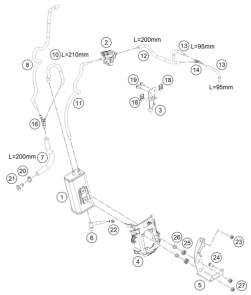

32

SEPERATE ENCLOSURE

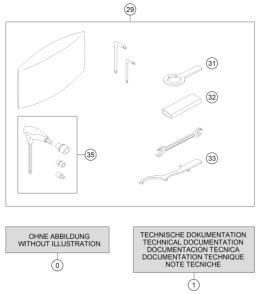

33

ANTIBLOCK SYSTEM ABS

34

TECHNIC INFORMATION STICKER

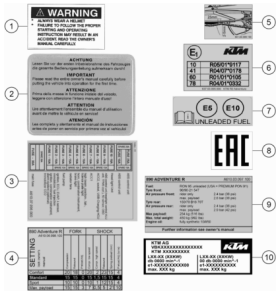

35

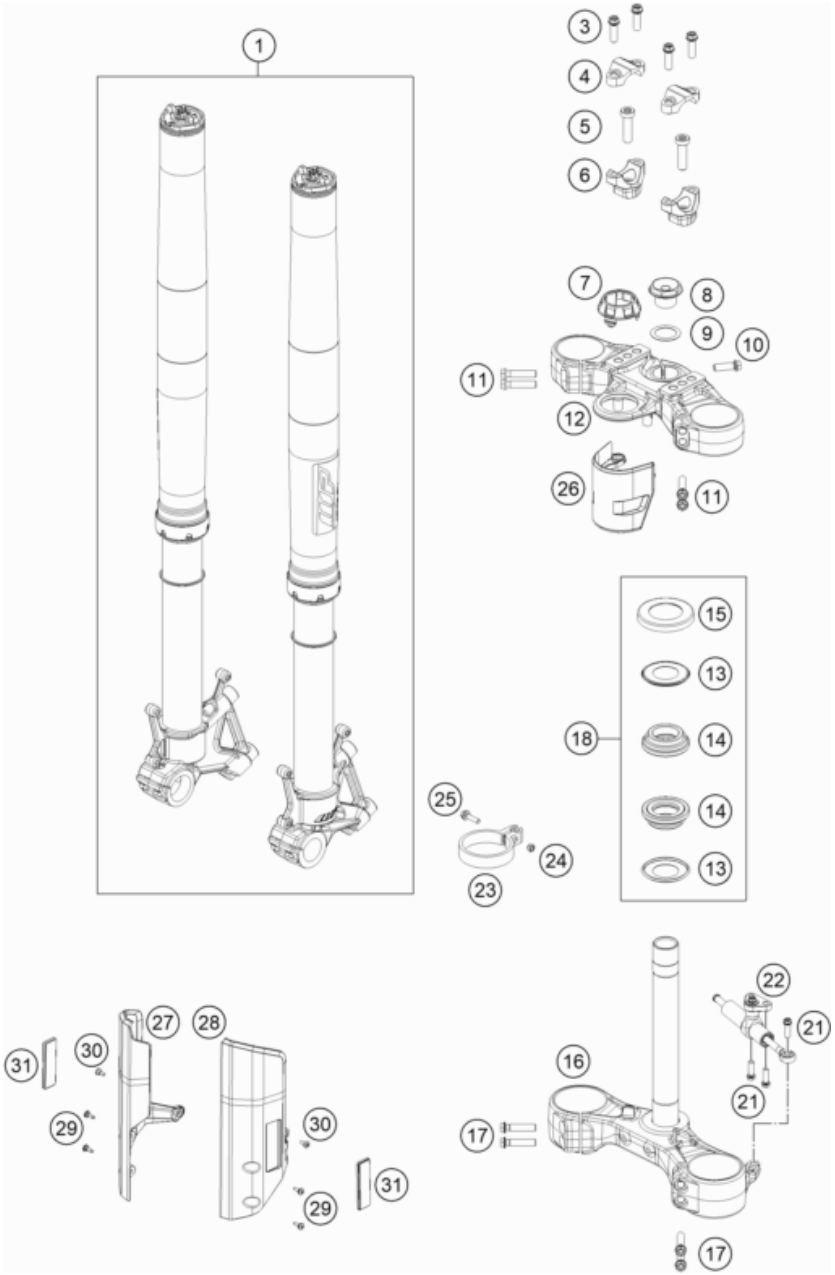

POS	PARTNUMBER		PIECE
1	A610C154W401000	Fork KTM 890 Adventure R 23	1
3	0025080256	HH collar screw M8x25	4
4	7720103800030	HANDLEBAR CLAMP 28MM	2
5	0032100356S	AH-COLLAR SCREW M10X35 ISA45	2
6	5940103903230	HANDLEBAR SUPPORT D=28 H=32 BL	2
7	63501045010	Ignition lock cover	1
8	54801036000C1	Steering head screw M20x1,5 WS_27	1
9	0988253505	thrust wash DIN0988-25x35x0,5	1
10	0015080256S	HH COLLAR SCREW M8X25 WS=10	1
11	0025080306	HH collar screw M8x30	4
12	63701034030C1	Triple clamp top	1
13	69001084100	Stearing head gasket	2
14	69001181000	STEERINGHEAD KPL.17	2
15	69001086100	PROT. RING STEER. HEAD BEARING	1
16	63701032030C1	Bottom triple clamp cmpl.	1
17	0025080356	HH collar screw M8x35 TX40	4
18	69001181010	Stearing head rep. Kit	x
21	0025080256S	HH COLLAR SCREW M8X25 TX40	3
22	16181S55E	Steering damper790 Adventure cpl.	1
23	54601099000	SPEEDOMETER CABLE GUIDE MARZO.	2
24	0985050003	SELF LOCKING NUT DIN0985-M 5	2
25	0025050206	HH collar screw M5x20 TX30	2
26	63511066010	Ignition lock cover	1
27	63501093000EBA	Fork protector right with decal	1
28	63501092000EBA	Fork protector left with decal	1
29	69008021060	special screw M5x17	4
30	69008021160	special screw M5x12	2
31	60012080100	SIDE REFLECTOR YELLOW ''CEV''	2

196350111

62246

* NEW PART

X ON DEMAND

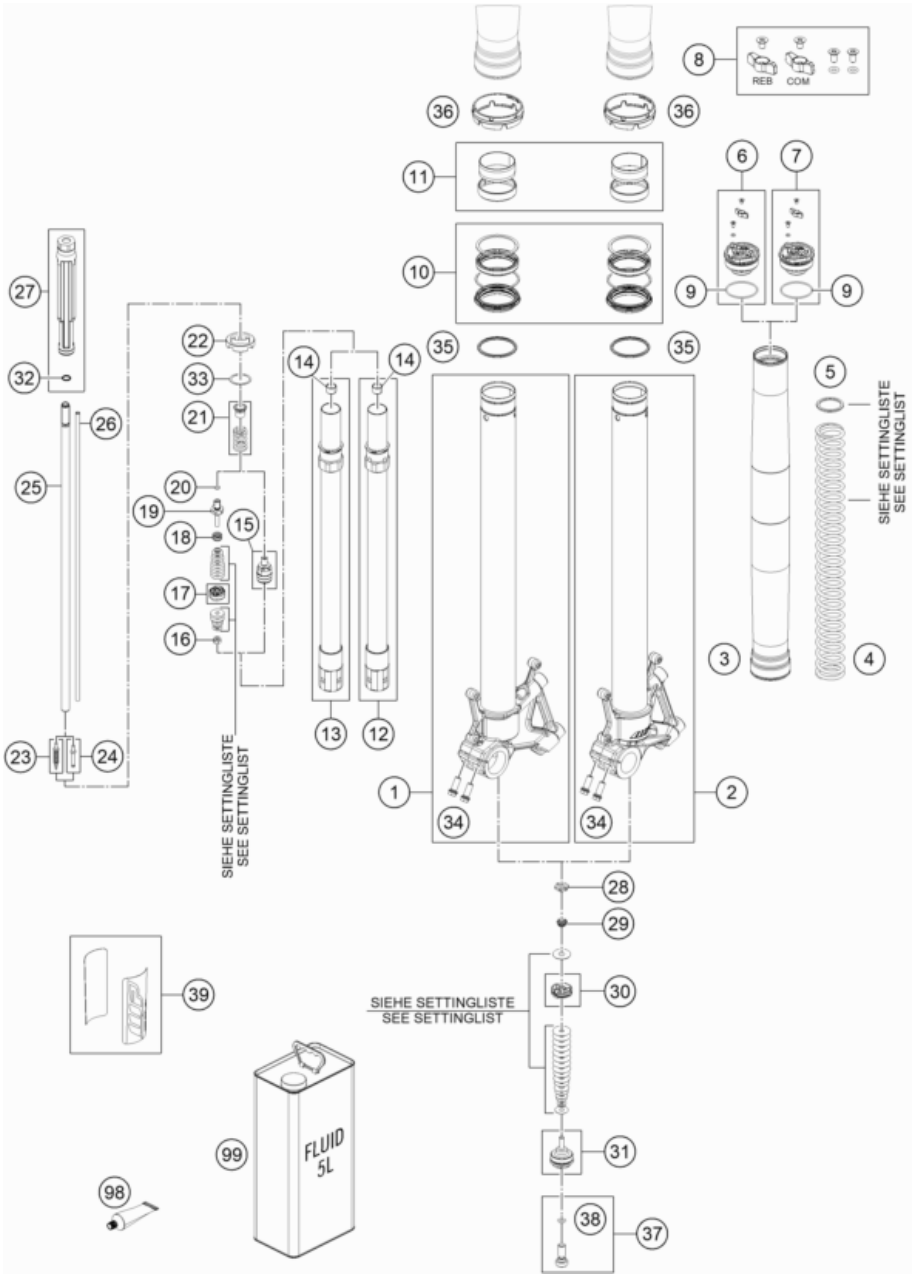

196410130

POS	PARTNUMBER		PIECE
1	48601952S1	axle clamp right d48 25mm cpl	1
2	48601951S1	axle clamp left d48 25mm cpl.	1
3	48601794	Outer tube L567 D54 / D60	2
4	91410162S	mainspring (44) 6.2-460 set fork	x
4	91410142	Mainspring (44) 6,7-460 fork	1
4	91410163S	mainspring (44) 7.2-460 set fork	x
5	48600458	Washer 35x43x1,5 plastic	x
5	48600456	Washer 35x43x2,5 plastic	x
5	48600457	Preload bush 35x43x3,5	x
6	48602028S4	screw cap M51x1,5 rebound cpl.	1
7	48602028S3	screw cap M51x1.5 compression cpl.	1
8	RP10021	Adjuster kit screw cap	x
9	48600048	O-ring 46x2 NBR70 siliconized yellow	2
10	RP10012	Sealkit 48mm SKF black	x
11	R14047	Guide bushing set fork 48mm	x
12	48600763S3	Tube L350 with screwsleeve and hole	1
13	48600763S4	Tube L350 with screwsleeve	1
14	48600430	Guide bushing 12x14x10	2
15	48601843S2	Tap compression cpl.	1
16	40540486	Nut M6x0,5 h6,5 WAF10 rebound	1
17	48602002S	Midvalve piston assembly d23	1
18	35480377	Spring (11,7) 1,5-8 valve	1
19	48600576	Tap 6x46 rebound	1
20	48600299	O-ring 6x1,2 NBR70	1
21	48601929S	rebound spring C60 cpl	2
22	48601922	spring support ring	2
23	48601096S	Needle 4,5x43,6 cpl.	1
24	48601558S	Needle 4,5x38,2 cpl.	1
25	48601923	Piston rod 12x501	2
26	48601924	Adjuster tube L=471.5	2
27	S228700003S0100	Stop 12,4x31,9x200,3 kpl.	2
28	48600163	Nut valve M6x0,5 h6,5 WAF17	2
29	48600202	Spring (8,5) l6,5 valve	2
30	48601934S	Piston 6x27,3x9 compression cpl.	2
31	48601921	Tap 6x42,5 base valve	2
32	04500003	O-ring 11x2,5 NBR70 PTFE yellow	2
33	48601702	Shim 27,5x33x0,3	2
34	0025080206	HH collar screw M8x20	4

51266

* NEW PART

X ON DEMAND

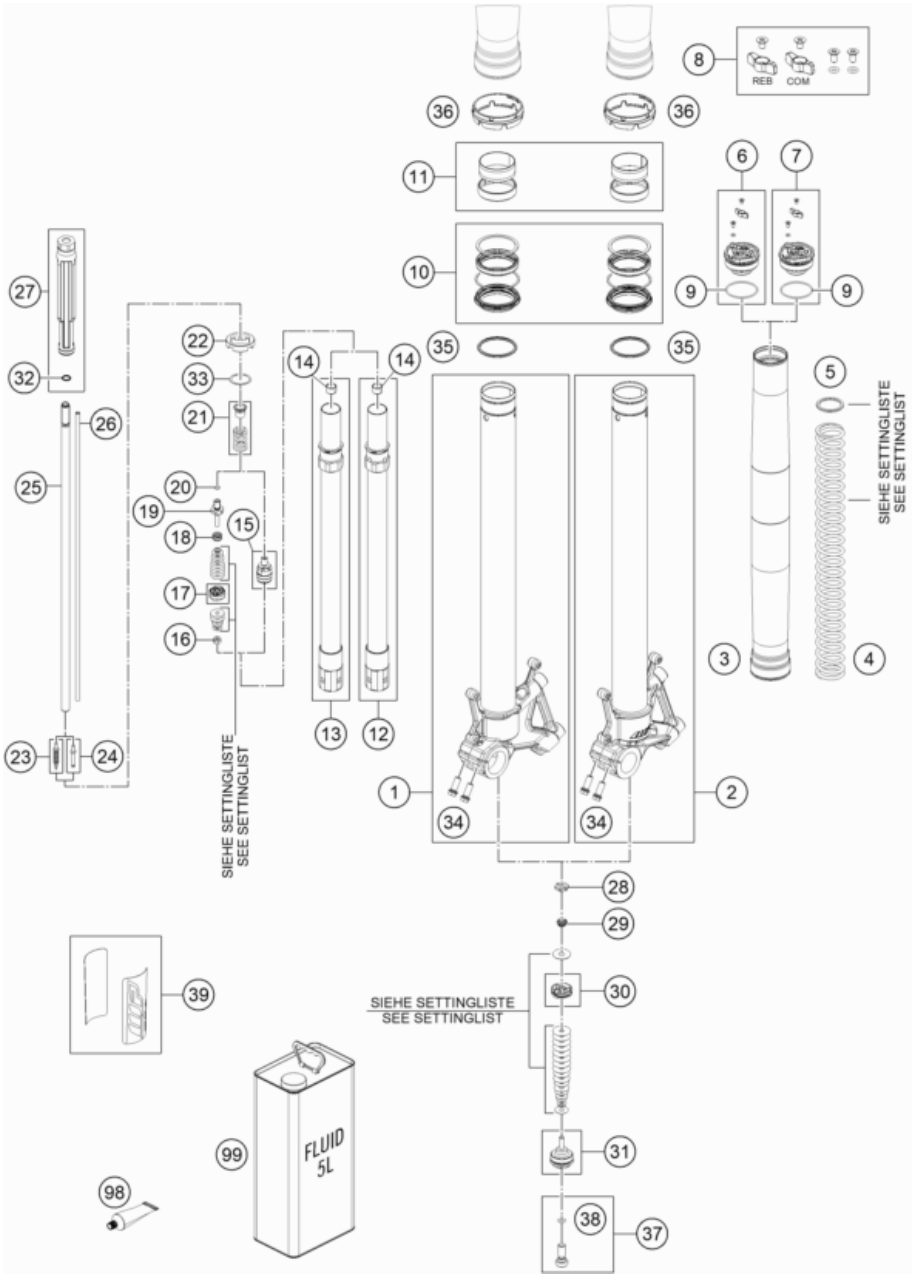

196410130

POS	PARTNUMBER		PIECE
35	48602007	Stroke indicator 48mm red	2
36	48601986	Fork protection ring 60,1mm	2
37	48601976S	RingISK screw M10x25 with o-ring	2
38	35480085	O-ring 7x2 NBR70	2
39	52000281SET	sticker Xplor OC 100x46	1
98	T14034	Fuchs grease IPR (250g)	x
99	48601166S1	Fork Fluid Viscosity 4.0 5L	x

51266

* NEW PART

X ON DEMAND

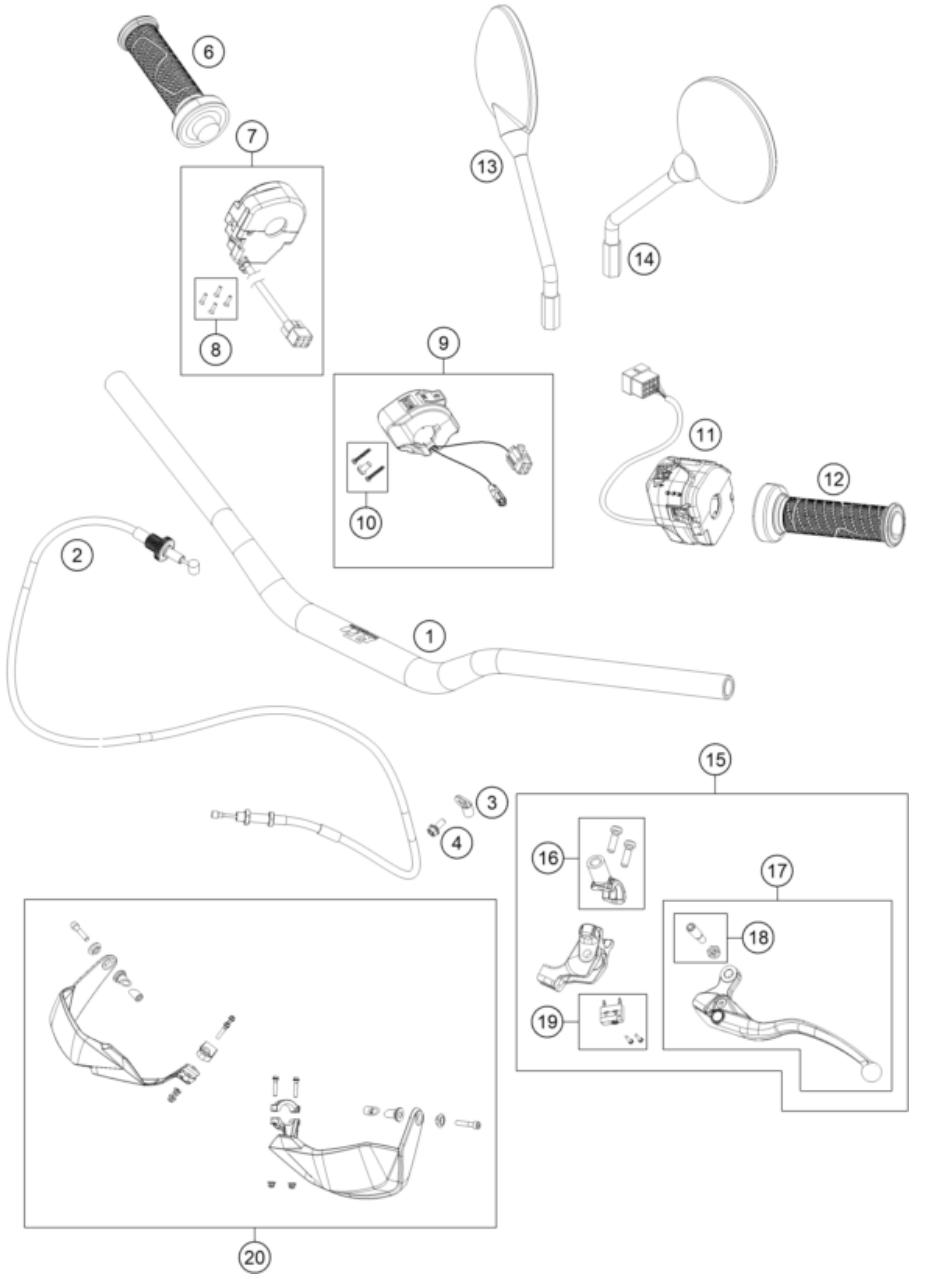

216370210

POS	PARTNUMBER		PIECE
1	6070200100033	Handlebar	1
2	63502090000	Clutch cable	1
3	64132070000	PVC clamp 6.4 MM Heyman	1
4	0025050126	HH collar screw M5x12 TX30	2
6	60702012000	Grip tube (no heating)	1
7	60711012000	Ride-by-wire without throttle tube	1
8	76011073110	SCREW SET START-STOP SWITCH	1
9	A61011074000	Start / emergency stop switch right	1
10	61411174010	Screw set start-stop switch	1
11	76011270200	Combination switch	1
12	60702039100	Grip LHS w/o heater	1
13	28512040000	mirror, right	1
14	58412040100	mirror, left/right	1
15	63502031000	Clutch lever cmpl.	1
16	6350204400030	Clamp cpl. incl. 2 screws	1
17	63502040000	Clutch lever	1
18	64102038000	Kit lever pin	1
19	63511049000	Switch	1
20	60302179000EB	HANDGUARD L/R CPL.	1

62247

* NEW PART

X ON DEMAND

236370310

POS	PARTNUMBER		PIECE
1	63503101100EB	Frame 635TB	1
2	63703002006EB	Subframe right	1
3	63703002005EB	Subframe left	1
4	63508019050	Rear reinforcement	1
5	6350304800033	Rear footpeg bracket left	1
6	6350304900033	Rear footpeg bracket right	1
7	6350300200733	Cross member, black	1
8	60003044100	footrest bolt, rear	2
9	60003152000	ENGAGE PANEL FOOTREST L/S 03	2
10	60003051000	FOOTREST CPL. R/S REAR 03	1
11	60003050000	FOOTREST CPL. L/S REAR 03	1
12	60003052000	ENGAGE PANEL FOOTREST R/S 03	2
13	0799060003	retaining washer DIN 6799 - 6	2
14	6410301300033	Engine strut black	1
15	6350309019033	Skid plate frame holder, right cmpl.	1
16	6350309018033	Skid plate frame holder, left cmpl.	1
17	A61008006000C1	mask carrier element right	1
18	A61008005000C1	mask carrier element left	1
19	63503039051	Rear master cylinder guard	1
20	63703039066C1	Footpeg bracket front, right, cmpl.	1
21	63703038066C1	Footpeg bracket front, left, cmpl.	1
22	0800010025U0	Bushing 10,4x20x25	2
23	0035080356S	SCREW M8X35 ISA45 SS	2
24	0035080206S	SHCS M8x20 TX45	6
25	0024060136S	HH Collar screw M6x13 TX30 SL	4
26	0035100209S	SHCS M10x20 TX45 MK	2
27	0035100356S	ISA screw M10x35 ISA45	3
28	63503002093	Retain. brack., seat cowl pad front left	2
29	63503002090	Rubber seat cowl pad	2
30	0025060126S	Hex collar screw M6x12 ISA30 self-lockin	4
31	69014017000	SPECIAL SCREW M6X18 ISA30 08	1
32	58411098100	CONTACT WASHER M6 VSV-K6	2
33	0035100456S	ISA screw M10x45 ISA45	2
34	0035100409S	ISA collar screw M10x40 ISA45	4
35	0025080166S	HH collar screw M8x16 TX40 SL	4
37	0035100609S	AH-COLLAR SCREW M10X60 ISA45	1
39	0025080166	HH COLLAR SCREW M8X16 TX40	1
40	0025060256	HH collar screw M6x25 TX30	2

62250

* NEW PART

X ON DEMAND

236370310

POS	PARTNUMBER		PIECE
41	54310086200	SELF LOCKING NUT M8 10.9	1
42	014579080301S	screw ISO 14579-M8x30-10.9-MK black	1
43	014579080506S	CYL. SCREW DIN14579 M8X50 SS	2
44	60003041010	FOOTREST RUBBER FRONT R/S 03	1
45	60003040010	FOOTREST RUBBER FRONT L/S 03	1
46	0025060166S	HH collar screw M6x16 TX30 SL	6
47	A61003096000	Front sprocket cover	1
48	0035080356	AH-COLLAR SCREW M8X35 ISA45	2
49	0125080003	washer DIN 125 A -8.4	2
50	60307048000	RUBBER SEAT-CONTACT SURFACE	2
51	54803044000	PIN FOR FOOT PED 51.5X9.8 MM	2
52	78003041050	FOOTREST R/S 08	1
53	78003040050	FOOTREST L/S 08	1
54	54603041000	FOOTREST SPRING L/S & R/S	2
55	0125100003	washer DIN 125 A 10.5	2
56	0094032253	PIN DIN0094-3,2X25 STEEL	2
57	54603048100	clip nut M6	6
58	54603048600	RANGE CHANGE METAL NUT M5 INOX	2
59	54603048000	RANGE CHANGE METAL NUT M8	2
60	69008021160	special screw M5x12	3
62	0035100656S	ISA screw, M10x65 ISA45	1
63	64103088000	Frame locking cap	2
64	60003044010	CLOSING PANEL FRONT L/S R/S 03	2
65	0985050003	SELF LOCKING NUT DIN0985-M 5	2
66	54310086100	SELF LOCKING NUT M10 CU WS=14	2
67	61407049000	BUSHING 8.4X12X21.5	2

62250

* NEW PART

X ON DEMAND

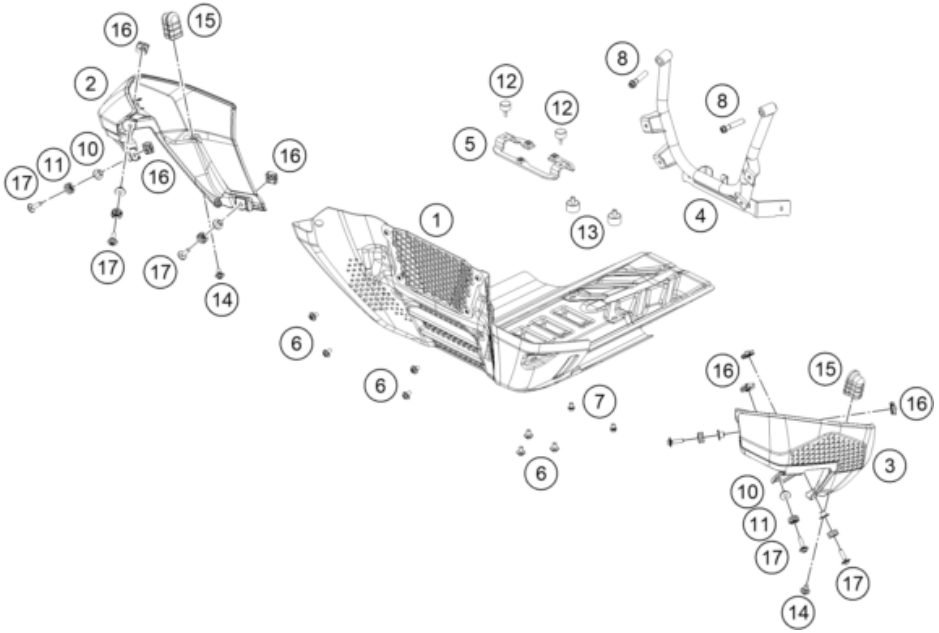

236370330

POS	PARTNUMBER		PIECE
1	A6100309000001	Skid plate	1
2	A61007025020	Tank protector right	1
3	A61007025010	Tank protector left	1
4	63503090050	Front skid plate linkage	1
5	63503090016	Lower Alu Skidplate Support	1
6	0025060106	HH collar screw M6x10 TX30	7
7	0025060086	HH collar screw M6x8 TX30	2
8	0025080406S	Collar screw M8x40 ISA40 SS	2
10	61342041000	COLLAR BUSH 6,5X9X18X8,5	6
11	62142041000	DAMP. COMPONENT ABS MODUL	6
12	75007046010	SEAT RUBBER 10 MM	2
13	63503190017	Silent block 20x12 M6x10/M6x8	2
14	83008000012	special screw M6x12x3	2
15	60307020000	TANK RUBBER	2
16	54603048300	RANGE CHANGE METAL NUT M6 INOX	6
17	69014117000	Collar screw M6x22-8.8 ISA30	6

62161

* NEW PART

X ON DEMAND

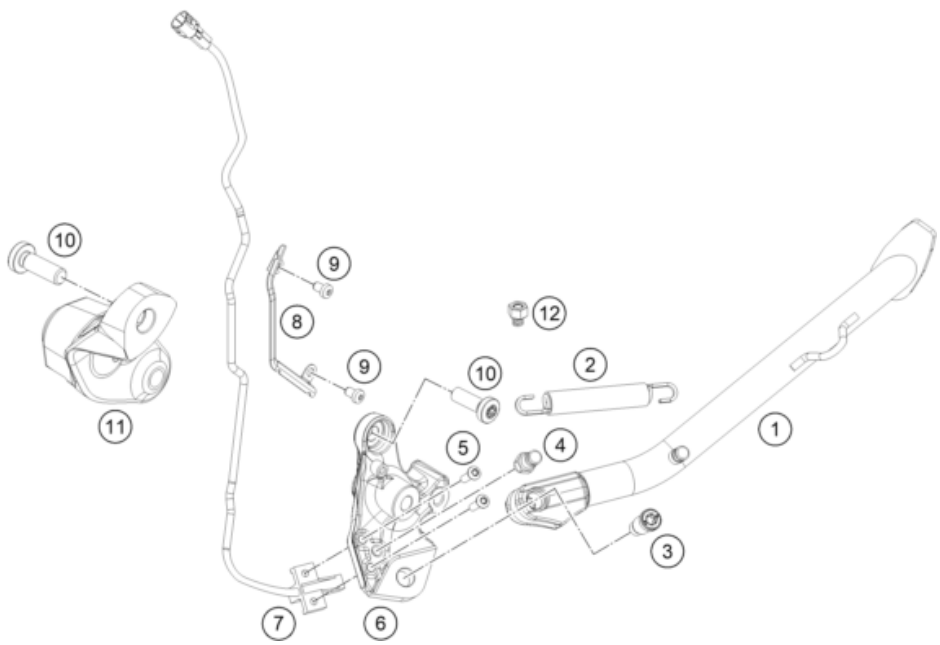

196350360

POS	PARTNUMBER		PIECE
1	63503423000C1	Side stand	1
2	61003024000	SPRING L=116 MM 05	1
3	62503027200	SCREW FOR SIDE STAND M10X31,2	1
4	63503028010	Special screw side stand spring	1
5	0738050202	Lens head screw ISO 7380-M5X20A2	2
6	63503126100C1	Side stand bracket	1
7	93511045000	SWITCH SIDE STAND	1
8	64103001099	Racket side-stand-cable	1
9	0018050103	INT. TORX OVAL HEAD M 5X10 8.8	2
10	0035100309S	SHCS M10x30 TX45	2
11	63503016040C1	Main stand console right	1
12	90103029000	MAGNET HOLDER	1

62248

* NEW PART

X ON DEMAND

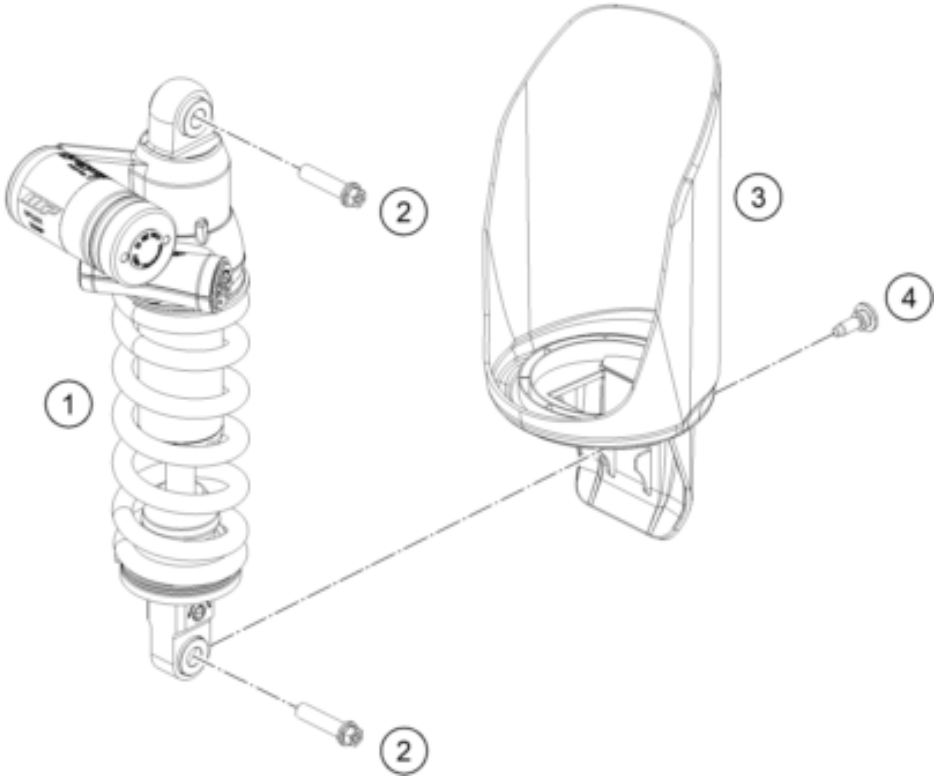

216370411

POS	PARTNUMBER		PIECE
1	A610C454W305000	Shock absorber KTM 890 Adventure R 23	1
2	0025120506S	HH COLLAR SCREW M12X50 TX45	2
3	63508075000	Splash protection shock absorber	1
4	69008021160	special screw M5x12	1

62251

* NEW PART

X ON DEMAND

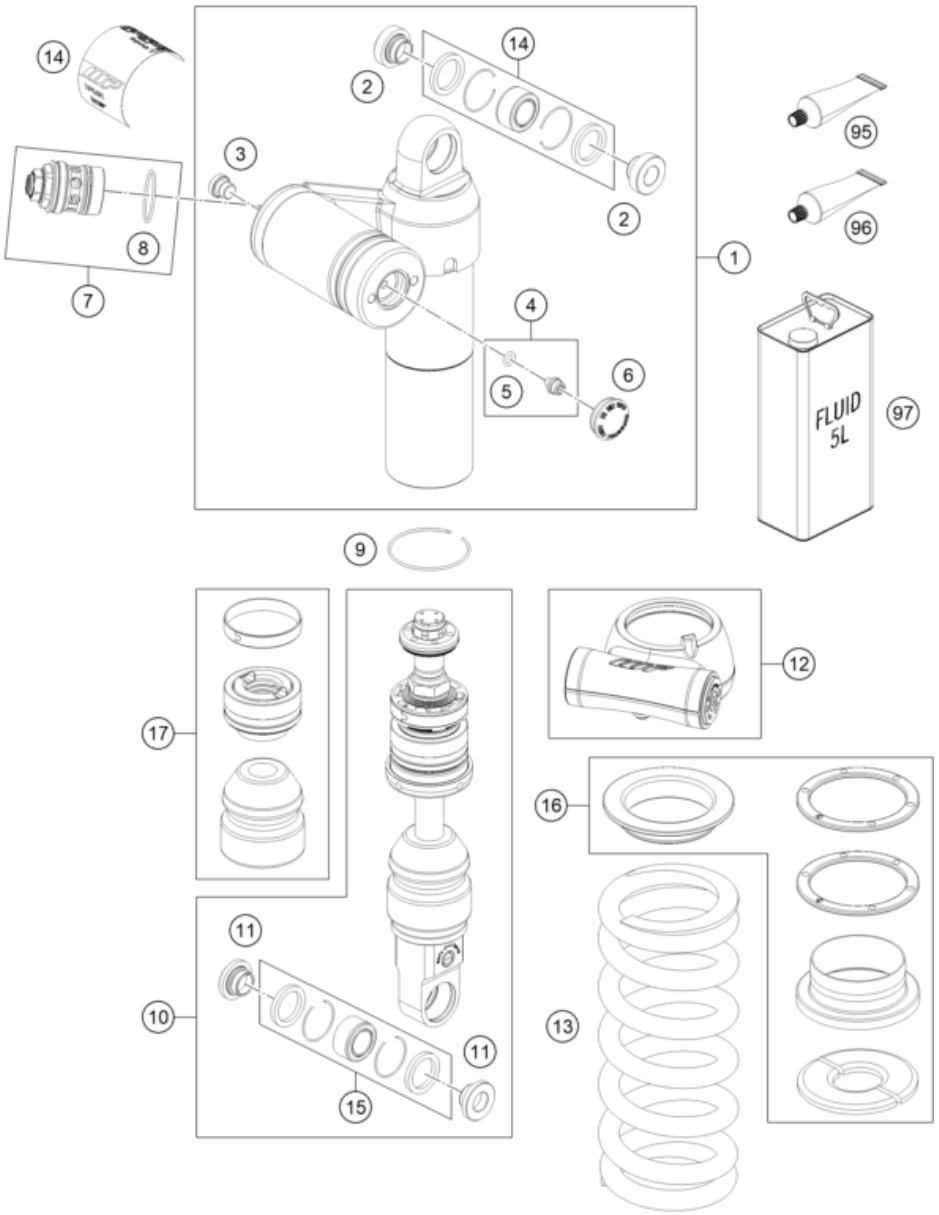

216370431

POS	PARTNUMBER		PIECE
1	46181324S1	shock upper part KTM 790 ADV R 19	1
2	46180064	Bearing bush 12x15/18/24,5x13,5	2
3	50180095	HS cylinder-head screw R1/8 I8	1
4	36120151S	PLUG SCREW M5X6 CPL.	1
5	46810893	O-ring 5,28x1,78 NBR70 black	1
6	46811208	Rubber cap do not open 22x5,5 NBR	1
7	50180213S34	Compression adjuster cpl. Natural	1
8	50180217	O-ring 27x1,5 Viton70 green ISO 3601-3S	1
9	46810010	Round-wire snap ring 49x1,8	1
10	46181327S2	shock bottom part KTM 890 ADV R 21	1
11	46180007	Distance bush 12x15/18/24,5x10,5	2
12	15000S23	Preload-Adjuster D46mm s10mm right grey	1
13	91010366	Main Spring (59) 95-210 shock white	1
14	52000214	Sticker set XPLOR PDS 90x40	1
15	R12012T	Ball joint bearing kit top 12mm	x
16	R15020	REP. KIT WASHERS	x
17	RP10013	Repair kit ADV. R	x
95	T625	GREASE	x
96	T158	GREASE RES. PP300 100GR	x
97	50180751S1	SHOCK ABSORBER FLUID 5 LT	x

55234

* NEW PART

X ON DEMAND

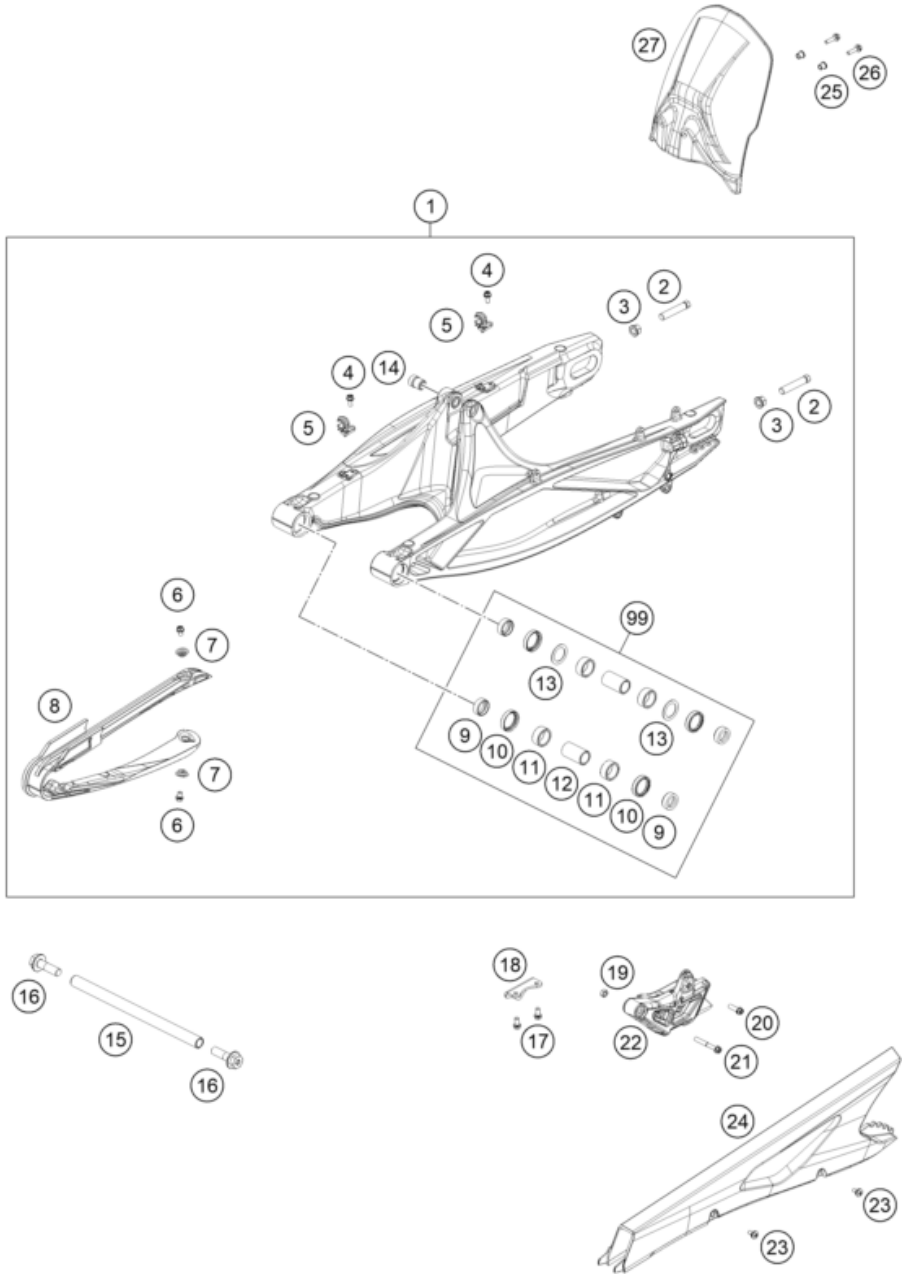

196350490

POS	PARTNUMBER		PIECE
1	6350403004433	Swingarm cpml. Black	1
2	58414030000	HH COLLAR NUT M10X1,25 WS=13	2
3	50304040100	screw M10x1.25x50 WS10	2
4	0025050126	HH collar screw M5x12 TX30	2
5	60104142000	Clamp	2
6	69008021160	special screw M5x12	2
7	46104066050	BUSH FOR CHAINSLIDER GUARD 02	2
8	64104066000	chain slide protection	1
9	54804034000	BUCKET F. SHAFT SEAL RING 03	4
10	0760253270	radial shaft seal 25x32x7	4
11	0618222812	NEEDLEBEAR HK2212V 22/28/12 MB	4
12	59404032000	BEARING SLEEVE 17X22X38,7 03	2
13	54603036000	STOP DISK 22,2X31,7X1	2
14	64104030020	Bushing Shock Mounting	1
15	64104037000	swing arm bolt	1
16	76504038000	SPECIAL SCREW M12X40 SW19	2
17	0025060126	HH collar screw M6x12 TX30	2
18	63504030010	Retaining bracket, chain guide	1
19	0934060003	hex nut DIN 934 M6	1
20	0025060206	HH collar screw M6x20 TX30	1
21	0025060456	HH COLLAR SCREW M6X45 TX30	1
22	78004070100	CHAIN GUIDE CPL.	1
23	69008021160	special screw M5x12	2
24	63504061000	Chainguard	1
25	64104050010	Bushing 5,5x8,3x9	2
26	0025050206	HH collar screw M5x20 TX30	2
27	63504050000	splash protection swingarm	1
99	79004030010	SWING ARM REPAIR KIT SX-F	1

49548

* NEW PART

X ON DEMAND

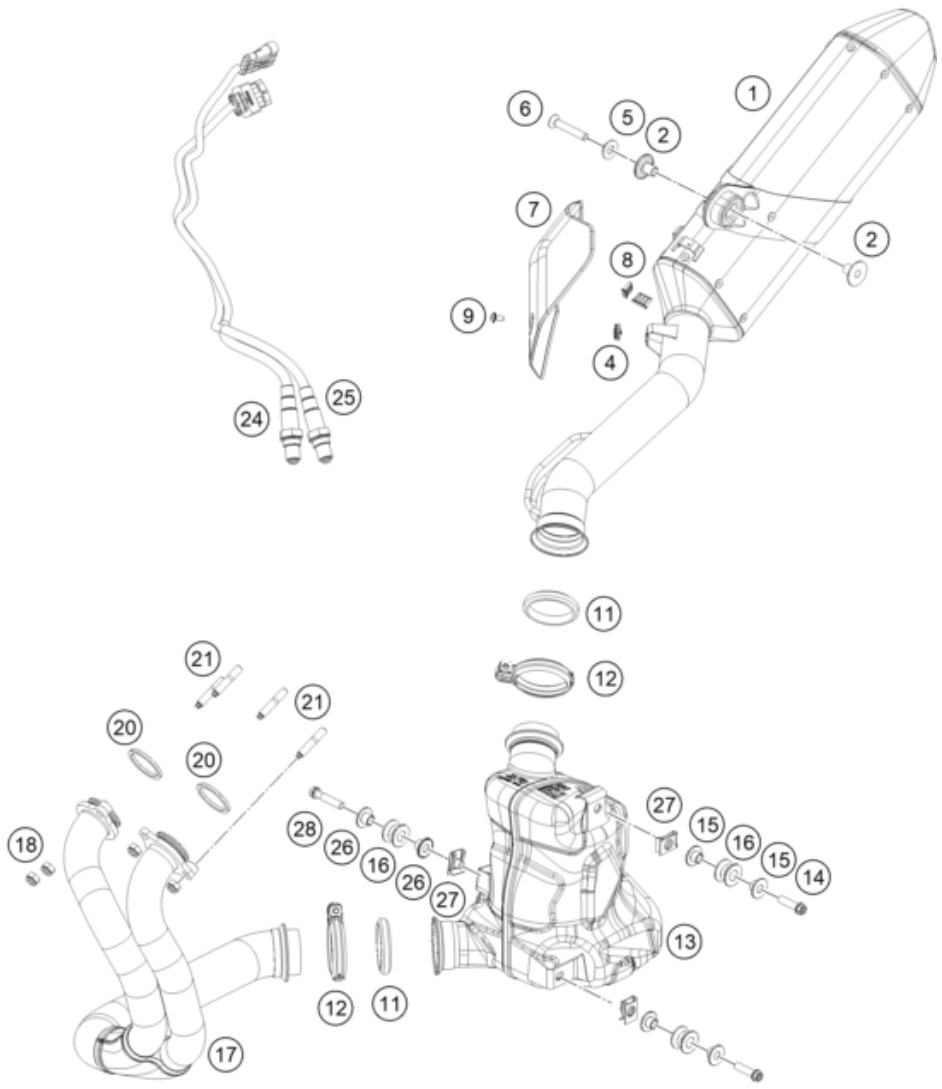

216370510

POS	PARTNUMBER		PIECE
1	63505183000	Silencer	1
2	61305069000	BUSHING 8,5X11X29	2
4	54603048600	RANGE CHANGE METAL NUT M5 INOX	1
5	60405069000	conical seat Alu	1
6	0019080506	COUN.-SUNK SCREW M8X50 ISA10.9	1
7	63505111000C1	Heat protection black cmpl.	1
8	27005011011	DAMPING ELEMENT SILICON	2
9	78105081010	SCREW TORX M5X10	1
11	69005105005	Manifold gasket	2
12	63605058100	Exhaust clamp tube 50 mm	2
13	63605050100	Pre-muffler	1
14	0025080356S	HH COLLAR SCREW M8X35 TX40	2
15	58405050065	collar bushing 8.5x12x23.5x10	4
16	54305068100	damp. component silicone grey	3
17	63605007000	Manifold	1
18	51010086100	self-locking nut M8 Cu	4
20	64105005000	Exhaust gasket	2
21	63505015000	stud screw 835 M8x25 - 10.9	4
24	63541090000	O2 Sensor LSF 4	1
25	63541190000	O2 Sensor LSF 4	1
26	0800000901200	Collar bushing, 8.5x12x23.5x11.5	2
27	54603048000	RANGE CHANGE METAL NUT M8	3
28	0025080356S	HH COLLAR SCREW M8X35 TX40	1

62170

* NEW PART

X ON DEMAND

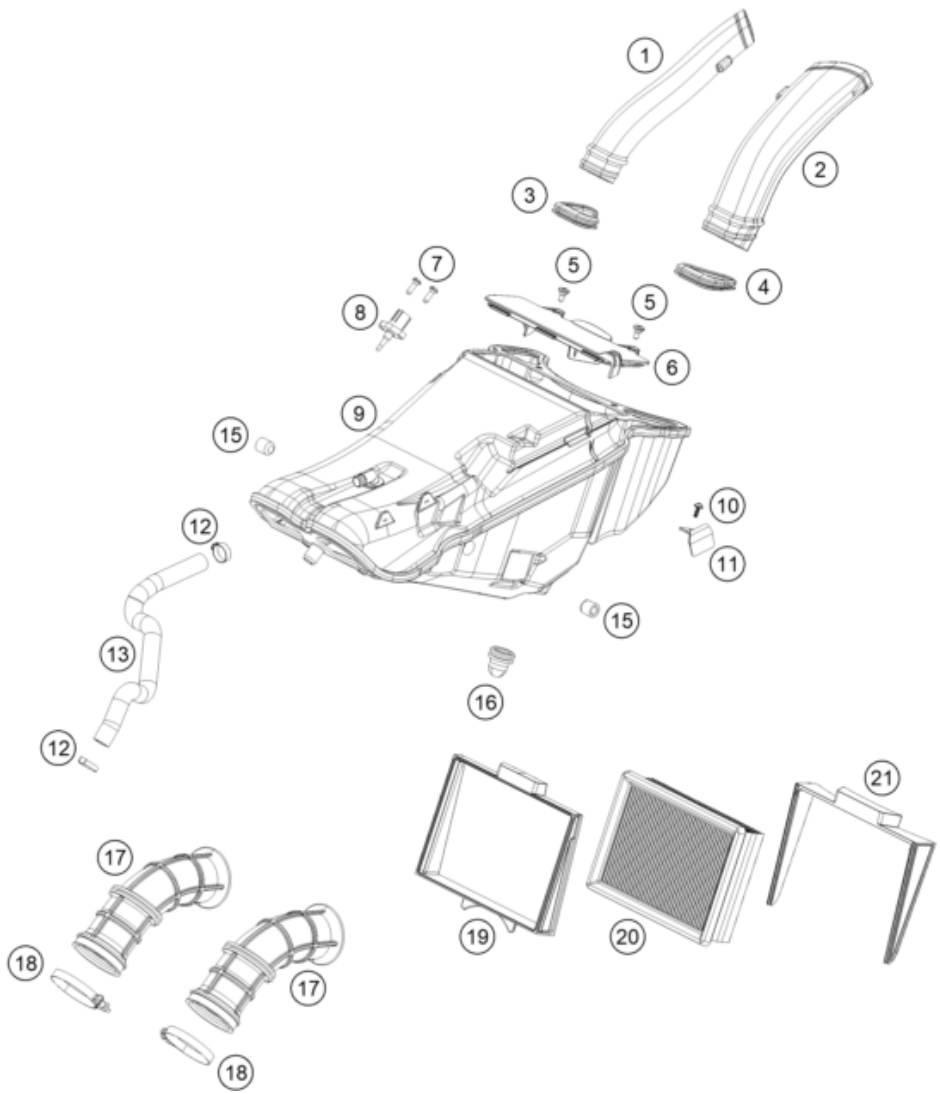

236370610

POS	PARTNUMBER		PIECE
1	63506041000	Intake duct, right	1
2	63506040000	Intake duct, left	1
3	63506040150	Dichtung Ansaugkanal rechts	1
4	63506041150	Dichtung Ansaugkanal links	1
5	69008121160	Special screw M5x12	2
6	63506002100	Air filter box cover	1
7	0081050161	EJOT PT SCREW K50X16 1451	2
8	61041080000	AMBIENT-AIR TEMPERATURE SENSOR	1
9	63506001200	Air filter box	1
10	0081050121	EJOT PT screw K50x12	1
11	63506002160	Kabelhalter Airbox	1
12	00050198706	VARIABLE ONE-EAR CLAMP 19,8MM	2
13	63530087000	Pre-formed hose engine breather	1
15	76006014000	rubber grommet	2
16	50206020200	Gummitülle geschlitzt	1
17	63506026100	Velocity stack	2
18	77236048000	HOSE CLAMP GEMI 58MM	2
19	63506116000	Filter clamp frame	1
20	A61006015000	Air filter	1
21	63506117000	Filterklemmung Keil	1

62249

* NEW PART

X ON DEMAND

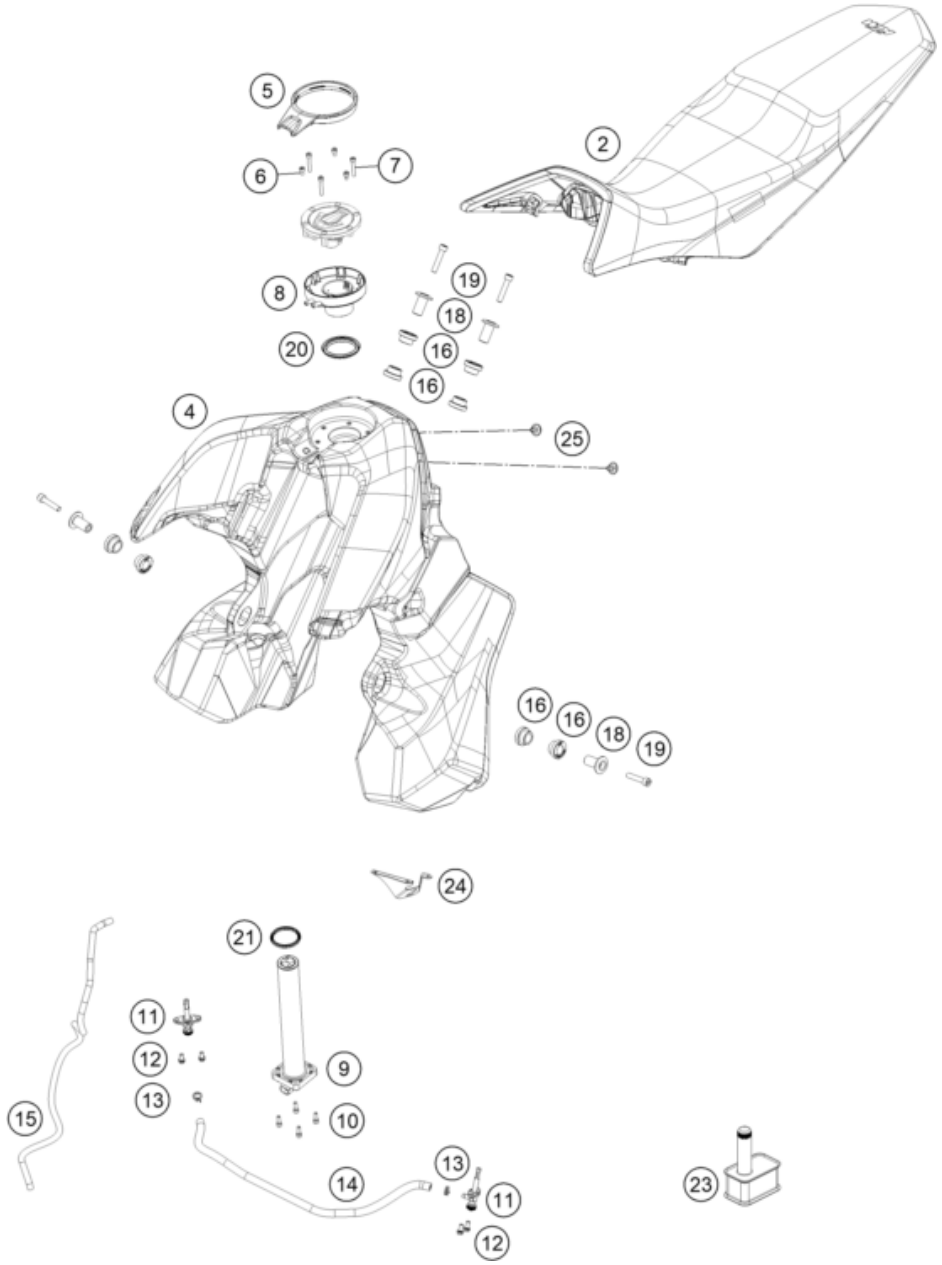

236370711

POS	PARTNUMBER		PIECE
2	63507140000	Sitzbank 800 Adv. R	1
4	63507613000HC	Fuel tank	1
5	63507058000	Fuel tank fairing	1
6	0912050083	SHCS DIN 912 M5x8	3
7	0912050303	AH SCREW DIN0912-M 5X30	3
8	A61007008050	Fuel tank filler neck	1
9	63507080200	Fuel lever sensor	1
10	0912050163	AH SCREW DIN0912-M 5X16	4
11	58507003200	FUEL COCK CPL.	2
12	0025060126	HH collar screw M6x12 TX30	4
13	58031005000	CLAMP YDNAC 10128 12MM	2
14	63507016000	Interconnection hose	1
15	63515027100	Tank overflow hose 718mm	1
16	61007065000	collar bushing, front tank holder	8
18	61007060000	collar bushing, bearing, outside	4
19	0912080403	SHCS DIN 912 M8x40	4
20	21007008151	gasket tank insert	1
21	60307080090	GASKET FUEL LEVEL SENSOR	1
23	00001000015	Motorex Fuel Stabilizer 125ml	1
24	63507087010	Cover fuel pump	1
25	0900000601200	Seat screw M6x11.5 ISA30	2

62253

* NEW PART

X ON DEMAND

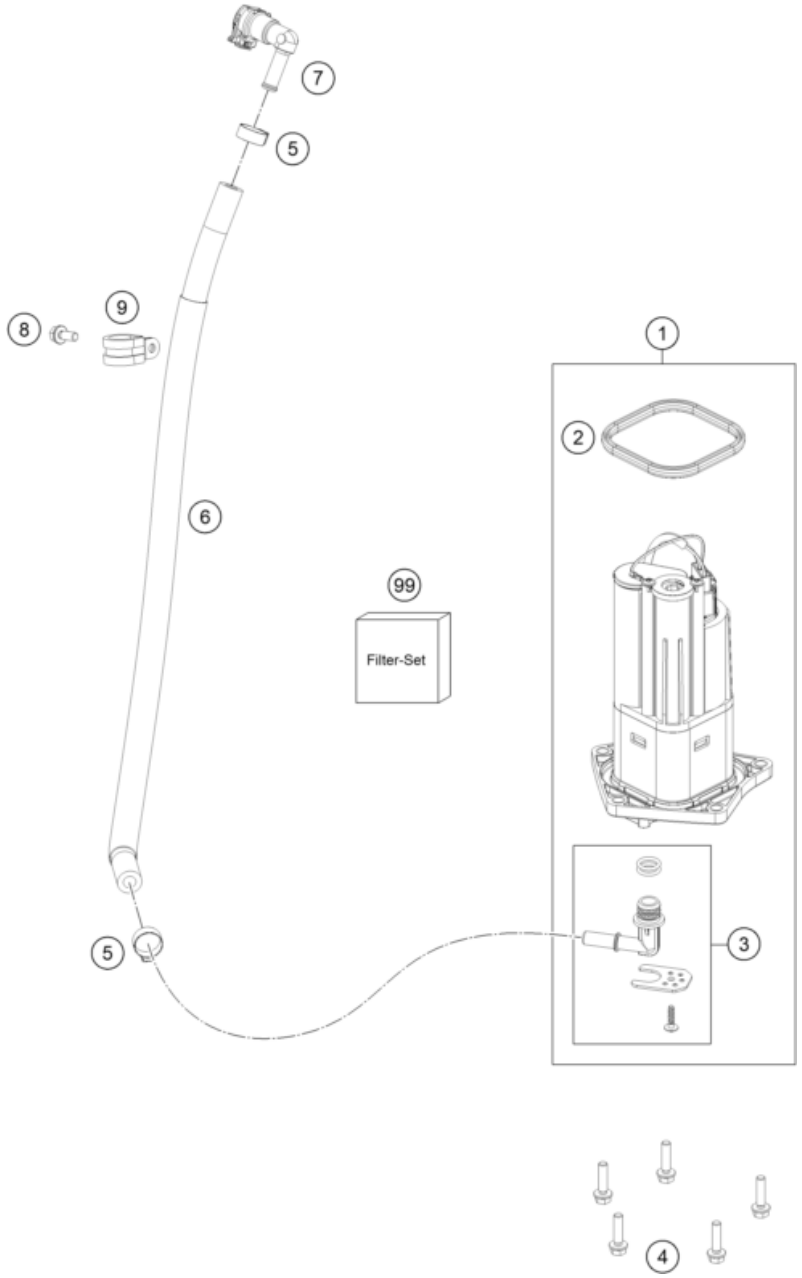

196350730

POS	PARTNUMBER		PIECE
1	63507088000	fuel pump	1
2	64107189000	Sealing	1
3	75007092000	HYDRAULIC CONNECTOR CPL.	1
4	0025060206	HH collar screw M6x20 TX30	5
5	00050157706	VARIABLE ONE-EAR CLAMP 15,7MM	2
6	63507017000	Fuel hose	1
7	76007028000	ELBOW CONNECTOR	1
8	0025050126S	Hex collar screw M5x12 ISA30 SS	1
9	49007439000	CLAMP RSGU 15/12	1
99	63507090000	filter kit	x

51895

* NEW PART

X ON DEMAND

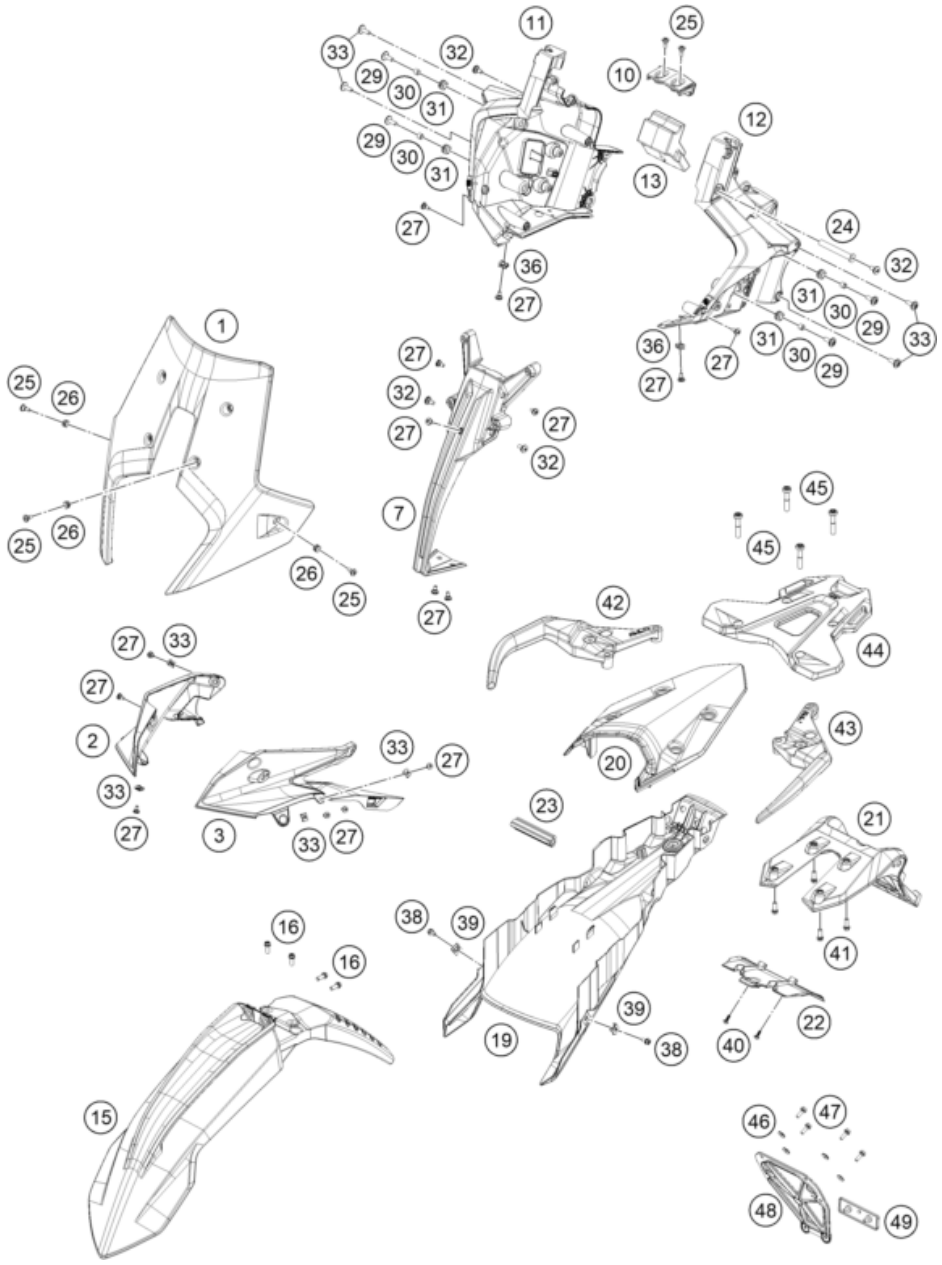

236370812

POS	PARTNUMBER		PIECE
1	A61008108000	Windshield R	1
2	A61008004000C1	Mask spoiler right	1
3	A61008003000C1	Mask spoiler left	1
7	A61014012000	Front sprocket cover	1
10	A61014012020	Cover mask support	1
11	A61008006000C1	mask carrier element right	1
12	A61008005000C1	mask carrier element left	1
13	A61014010050	Mask support foam	1
15	63508910000EB	Front fender	1
16	0025060166	HH collar screw M6x16 TX30	4
19	63508019000	Lower rear panel	1
20	63508013000AB	Tail section	1
21	63508015000	License plate holder support, upper part	1
22	63508016000	License plate holder support, lower bott	1
23	63503002030	Brace subframe	1
24	63514010040	wheel spindle mask support	1
25	60708008071	Special screw M5x14	8
26	60708008070	rubber bush windshield fixation	6
27	69008021160	special screw M5x12	11
29	69014017000	SPECIAL SCREW M6X18 ISA30 08	8
30	69014014000	BUSHING 6,1X9,2X7,5 08	4
31	60006001022	rubber grommet 9x11x16x8.5 mm	4
32	69004060150	bushing chain protection	2
33	54603048600	RANGE CHANGE METAL NUT M5 INOX	4
36	69008021080	clip nut M5	4
38	0025050106	HH collar screw M5x10 TX30	2
39	54603048200	RANGE CHANGE METAL NUT M5	2
40	0081050121	EJOT PT screw K50x12	2
41	0025060166	HH collar screw M6x16 TX30	4
42	63512009000	Passenger grip right	1
43	63512008000	Passenger grip left	1
44	6061201000030	BAGGAGE CARRIER BRIDGE	1
45	0035080406S	ISA collar screw M8x40 ISA45	4
46	75008023000	WASHER REAR-UT D=14MM	4
47	0025060166S	HH collar screw M6x16 TX30 SL	4
48	64112181100	Bracket for reflector	1
49	58412080400	Rear reflector red	1

62254

* NEW PART

X ON DEMAND

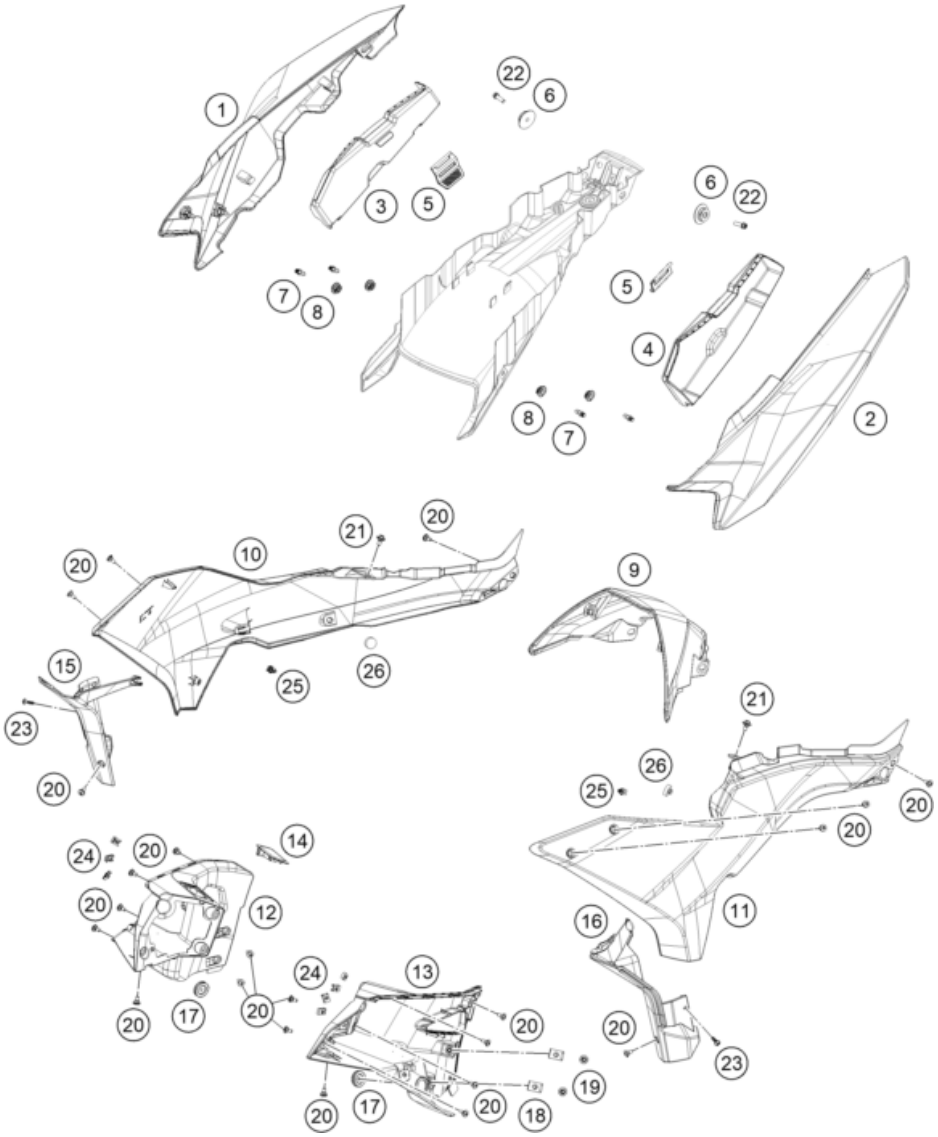

236370820

POS	PARTNUMBER		PIECE
1	63508042000ABG	Side fairing right with Decal	1
2	63508041000ABG	Side fairing left with Decal	1
3	63508042050	storage box right	1
4	63508041050	storage box left	1
5	63508041055	Closing rubber	2
6	63508040120	Socket sliding seat	2
7	47106003250	quick release pin, aluminium	4
8	47106003160	quick release rubber grommet	4
9	63711054010	Battery cover	1
10	A61008051000ABB	Fuel tank spoiler right with Decal	1
11	A61008050000ABB	Fuel tank spoiler left with Decal	1
12	A61008027000	Inner cover right	1
13	A61008026000	Inner cover left	1
14	A61008027010	Plug cap	1
15	A61008024000C1	Fuel tank spoiler inner right	1
16	A61008023000C1	Fuel tank spoiler inner left	1
17	64106001025	Gummitülle d 22.5/5/2	2
18	54603048100	clip nut M6	2
19	0024060206	HH collar screw M6x20 TX30	2
20	69008021160	special screw M5x12	22
21	83008000012	special screw M6x12x3	2
22	0025060206	HH collar screw M6x20 TX30	2
23	0081050181	SCREW FOR PLASTIC K50X18 T20	2
24	54603048600	RANGE CHANGE METAL NUT M5 INOX	7
25	61908040030	Bracket for side fairing	2
26	54308042000	RUBBER BUFFER	2

62255

* NEW PART

X ON DEMAND

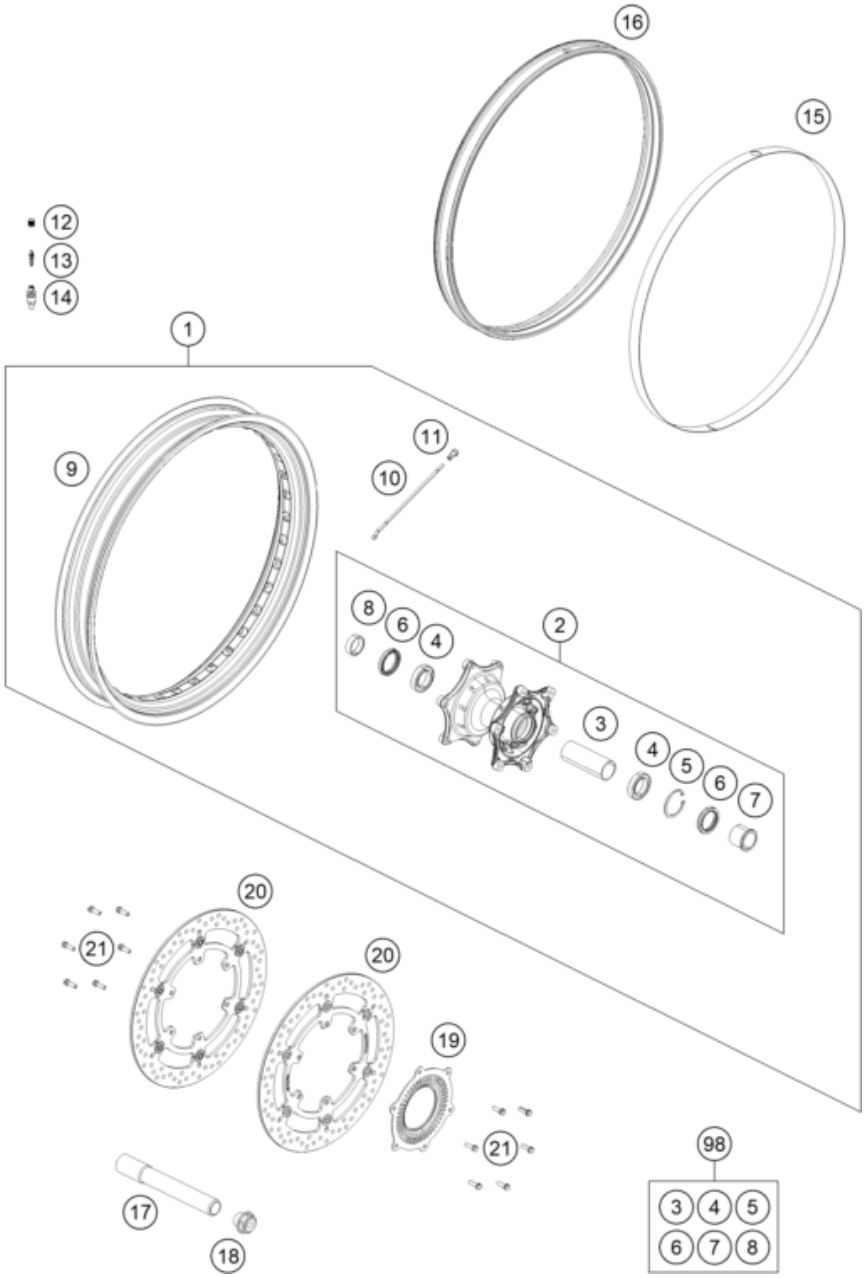

236370910

POS	PARTNUMBER		PIECE
1	63709001044C1	"Front wheel, cmpl. 2.15x21""" with anodized hub	1
1	6030900124433A	Front wheel cpl. 2,5X21'' with powder-coated hub	1
2	60309010244C1	front wheel hub cpl. anodized	1
2	6030901014433	FRONT HUB CPL. powder-coated	1
3	60309011000	BUSHING SPACER TUBE FRONT	1
4	0625069068	GR.BALL BEAR.6906 DDU2CG23S6NM	2
5	0472047175	CIRCLIP DIN0472-47X1,75	1
6	0760354771	SHAFT SEAL RING 35X47X7 TC	2
7	60309012100	SPACER BUSH. FRONT WHEEL L/S	1
8	60009013000	SPACER BUSH. FR. WHEEL R/S 03	1
9	6030917010033A	Rim 2.5x21''TL.bl.w.sticker	1
10	60309071000	SPOKE 5/4.37/M5	36
11	60310072200	Spoke nipple Quadrax M5	36
12	81210076020	Valve cap Schrader	1
13	81210076010	Valve insert Schrader	1
14	60309276000	Valve body cmpl.	1
15	60309073100	RIM BAND 21''	1
16	60309177000	GASKET RUBBER 2.5''X21''	1
17	60309081100	Wheel spindle, front	1
18	6900103600001	STEERING HEAD SCREW 09	1
19	60342020000	SENSOR GEAR ABS	1
20	63509060000	BRAKE DISC FRONT D=320	2
21	59009062019	SPECIAL SCREW M6X19 WS=8 10.9	12
98	60609015000	FRONT WHEEL REP. KIT ADV. 1050	x

62206

* NEW PART

X ON DEMAND

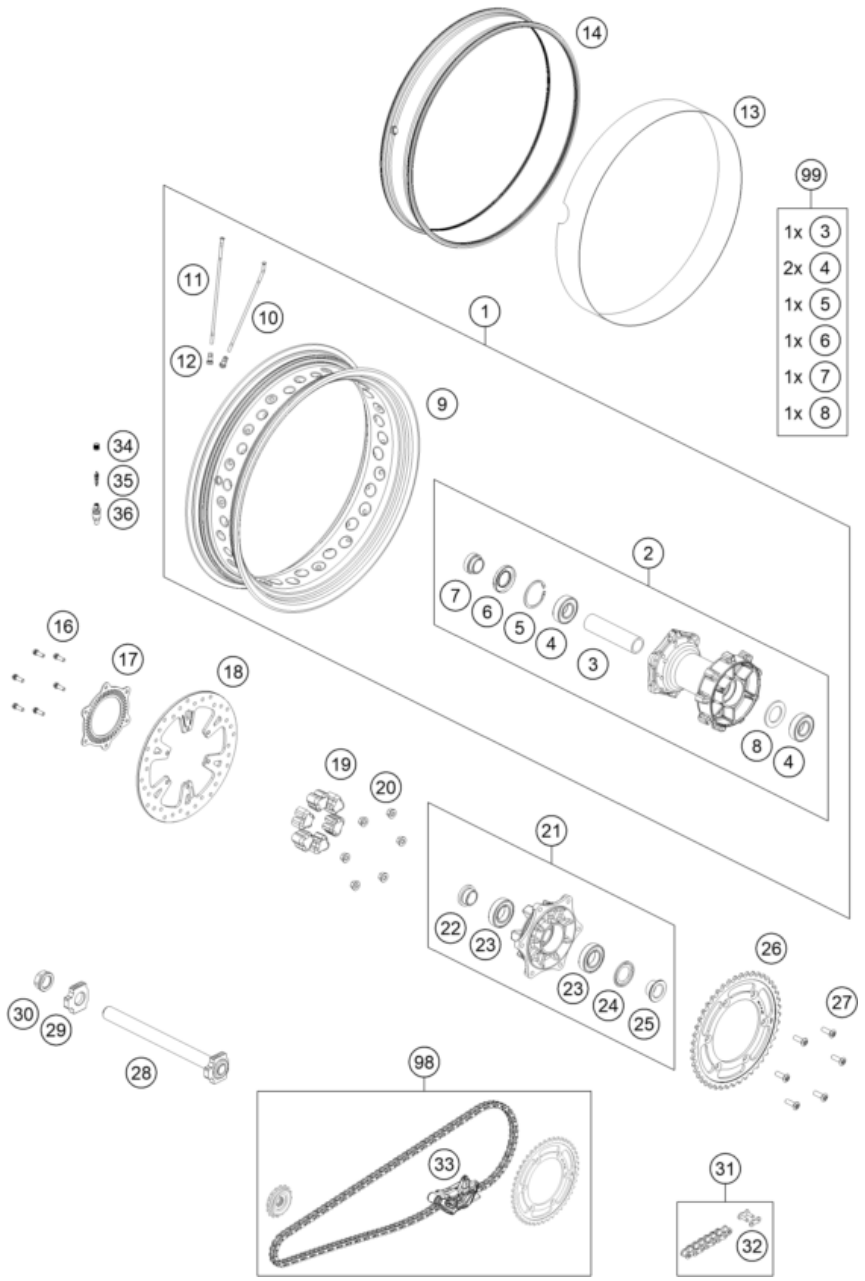

236371010

POS	PARTNUMBER		PIECE
1	63710001044C1	"Rear wheel, cmpl. 4.5x18""" with anodized hub	1
1	6031000124433A	Rear wheel cpl. 4,5X18'' with powder-coated hub	1
2	60310010244C1	Rear hub cmpl. anodized	1
2	6031001014433	REAR HUB CPL. powder-coated	1
3	60010011000	BEAR. SPACERTUBE L=124,8MM 03	1
4	0625062052	GR.BALL BEAR. 6205-2RSHC3HMTF7	2
5	0472052200	CIRCLIP DIN0472-52X2	1
6	0760305271	SHAFT SEAL RING 30X52X7	1
7	60310013000	SPACER BUSHING REAR WHEEL R/S	1
8	60010015000	SPACER RING 03	1
9	6031007010033A	Rim 4,5x18'' TL bl.w.sticker	1
10	60310071000	SPOKE 5/4.37/M5	18
11	60310171000	SPOKE 5/4.37/M5	18
12	60310072200	Spoke nipple Quadrax M5	36
13	60310073100	RIM BAND 18''	1
14	60310177100	GASKET RUBBER 4.5''X18''	1
16	59009062019	SPECIAL SCREW M6X19 WS=8 10.9	6
17	60142021100	SENSOR GEAR ABS REAR	1
18	63510060100	Brake disc rear	1
19	54610459000	RUBBER DAMPING BLOCK '91	6
20	06923080003	hex nut EN 1661 M8 WS13	6
21	7501005004433	Sprocket wheel carrier cpl. Black	1
22	60110014000	SPACER BUSH. SPR. SUPP. IN. 06	1
23	0625060060	BALL BEARING 6006 DDU2CG23S6NM	2
24	60110016000	NILOS RING 6006AV	1
25	60110012000	SPACER BUSH. SPROCKET SUPP. 06	1
26	75010051045	SPROCKET 45T 08	1
27	0019080266S	COUNTER-SUNK SCREW ISA45 M8X26	6
28	69010181044	Rear axel cpl.	1
29	60010084000	CHAIN TENSIONER R/S LC8 03	1
30	61010086000	COLLAR NUT M25X1,5 WS=32 05	1
31	78010167118	CHAIN DID 118 LINKS	x
32	78010166100	RIVETING LINK FOR 78010167118	x
33	63510067118	chain X-Ring 118 links with chain guide	1
34	81210076020	Valve cap Schrader	1

62208

* NEW PART

X ON DEMAND

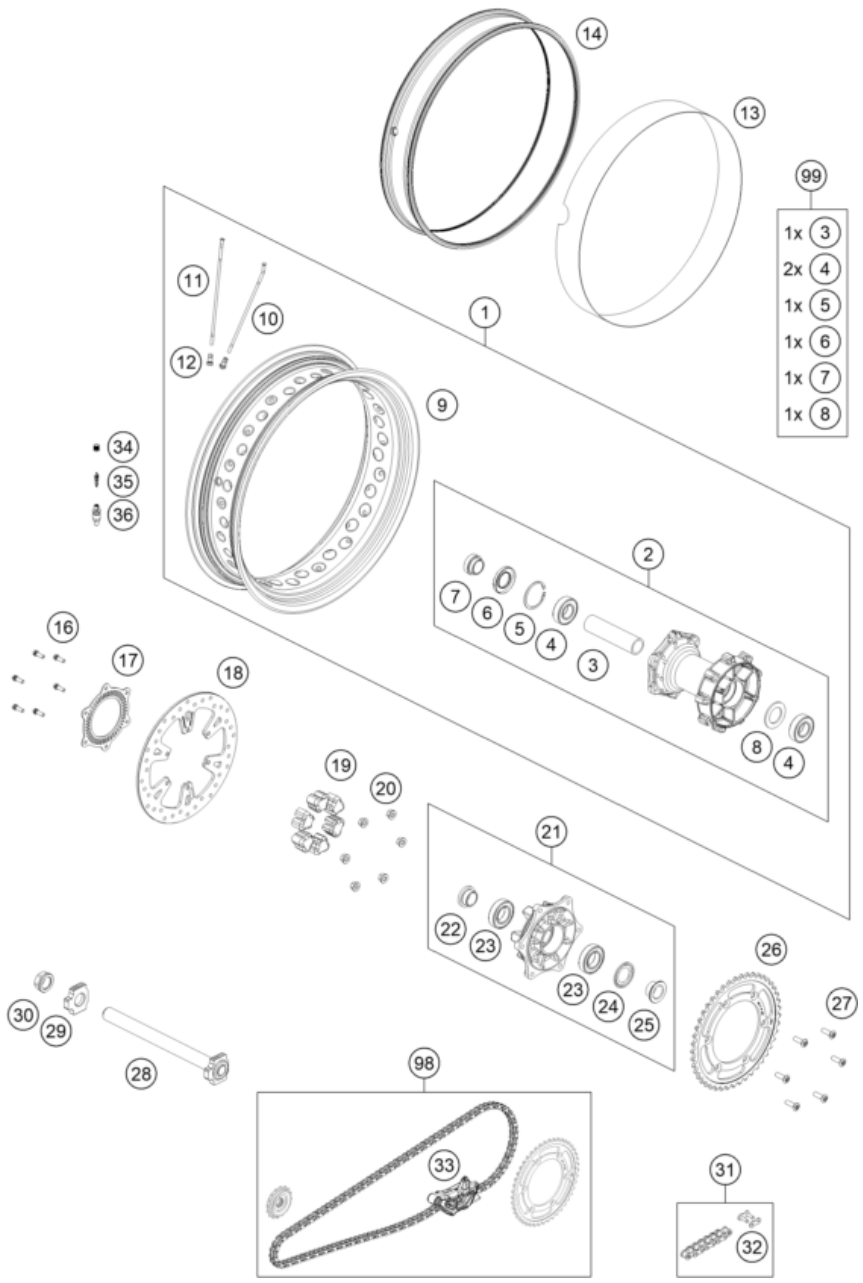

236371010

POS	PARTNUMBER		PIECE
35	81210076010	Valve insert Schrader	1
36	60309276000	Valve body cmpl.	1
98	00050002100	Drive set 16/45	x
99	60310015000	REAR WHEEL REP. KIT ADV 13-14	x

62208

* NEW PART

X ON DEMAND

236371110

POS	PARTNUMBER		PIECE
1	A61011075000	Main harness	1
2	63711085000	Engine wiring harness	1
3	64111058110	Cover flap, starter relay	1
4	76211058000	STARTER RELAY 07	1
5	60011093075	RUBBER CABLE TIE 75MM 03	x
5	60011093045	RUBBER CABLE TIE 45MM 03	x
6	60111094100	BAR SPACER 4/7 BLACK	2
7	61111057000	RELAY CM1A-R-12V-H80 07	5
8	44011076305	CABLE TIE 300/4,8MM BLACK	x
8	44011076140	CABLE TIE 140/2,5MM BLACK	x
8	44011076200	CABLE TIE 200/3,6MM BLACK	x
9	58011109130	FUSE 30 A	1
10	61111018100	TEMPERATURE SENSOR	1
11	64111059020	Cable holder, attachable	1
12	76011060100	DC HORN 12V	1
13	A61011083000	CCU control unit support	1
14	A61011083050	Front connector support	1
15	58605083014	SCREW M5X14 TORX 25 07	2
16	60311034000	VOLTAGE REGULATOR	1
17	0024060206	HH collar screw M6x20 TX30	2
18	76011030000	FLASHER UNIT LED 6,25W	1
19	60711042000	Power socket 12V	1
20	60311042050	Lid 12V-socket	1

62202

* NEW PART

X ON DEMAND

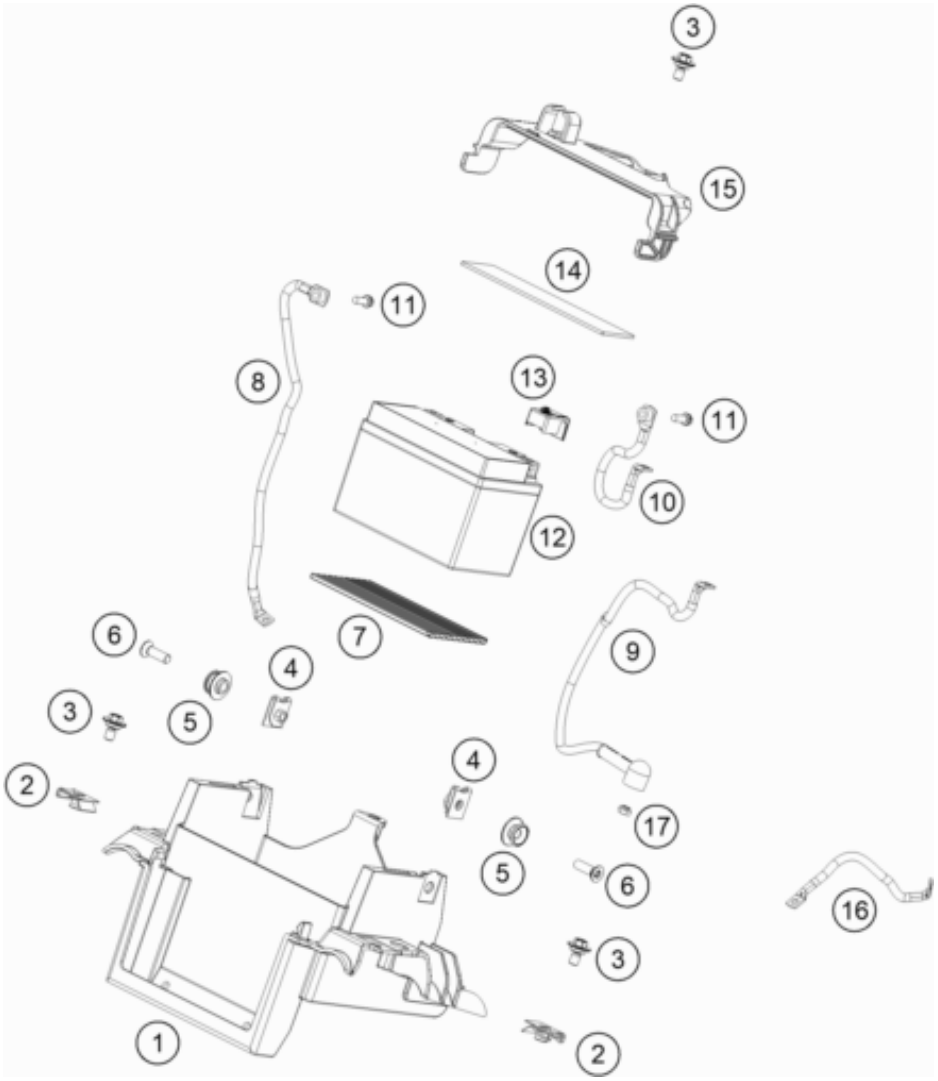

216371130

POS	PARTNUMBER		PIECE
1	63508025110	Electrics bracket front	1
2	54603048100	clip nut M6	2
3	83008000012	special screw M6x12x3	3
4	93008082010	Range change metal nut M6	2
5	63507040070	Seat bushing	2
6	014581060201	Count.snk screw M6x20 TX30	2
7	63511053050	rubber battery holder	1
8	63511097000	Ground wire	1
9	63511059000	Starter cable	1
10	63511059050	battery cable	1
11	0025060166	HH collar screw M6x16 TX30	2
12	64111053000	battery HTZ12A-BS(DA)	1
13	62111059060	COVER POSITIVE POLE	1
14	63508055010	Foam rubber 33x132	1
15	63508055000	Clamping bracket	1
16	64111096000	mass cable starter-frame	1
17	0985060003	SELF LOCK. NUT DIN0985-M 6	1

55613

* NEW PART

X ON DEMAND

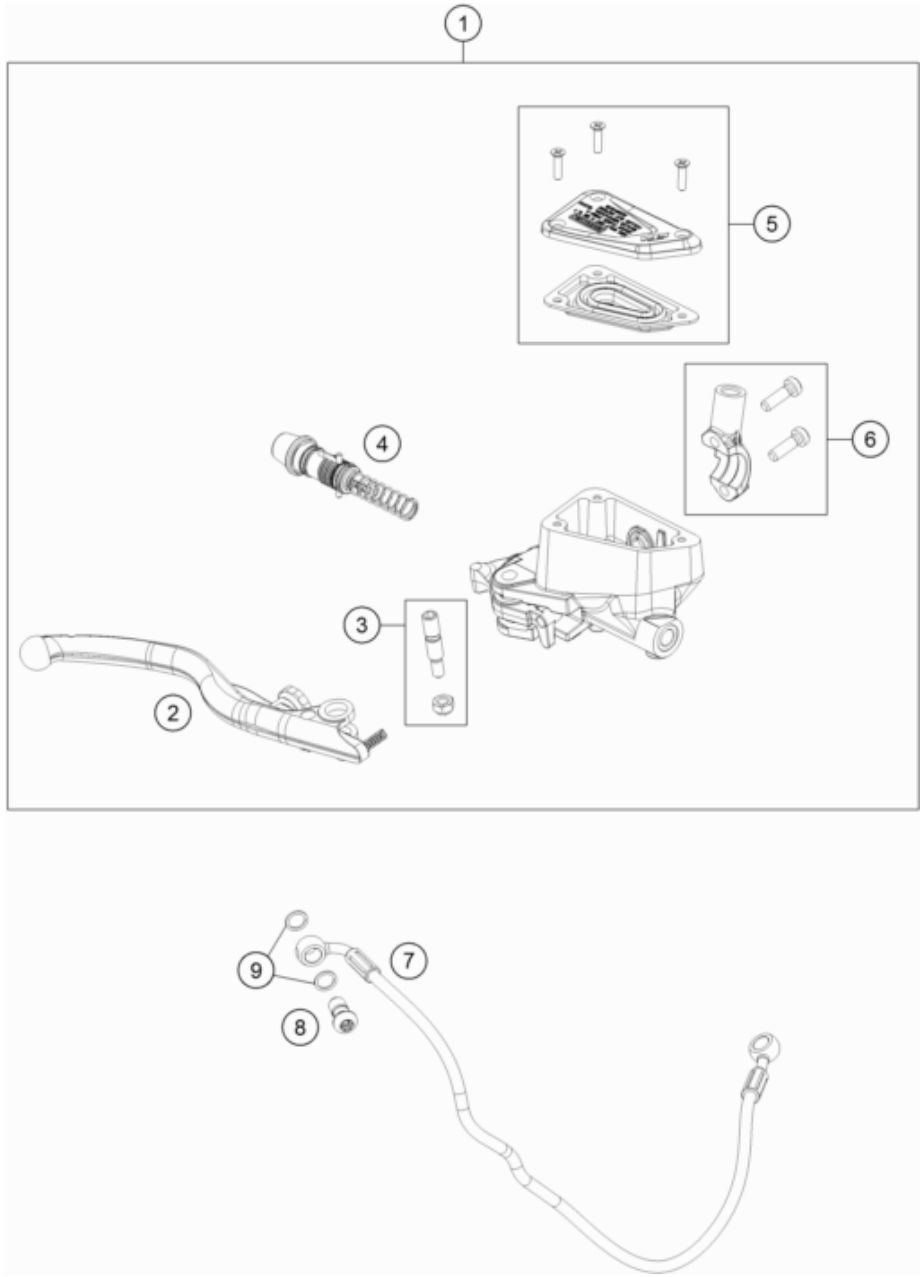

POS	PARTNUMBER		PIECE
1	63713101033	Front master cylinder cmpl.	1
2	63513002044	Brake lever	1
3	64113006000	Lever bolt cpl.	1
4	63713008000	Piston assembly	1
5	64113031100	Reservoir cap cpl.	1
6	6351300500030	mirror clamp incl. 2 screws	1
7	63542001000	Brake line MC-ABS	1
8	62113020100	banjo bolt M10x1x19.5	1
9	0603100141	sealing ring DIN 7603 10x14x1	2

196351310

57907

* NEW PART

X ON DEMAND

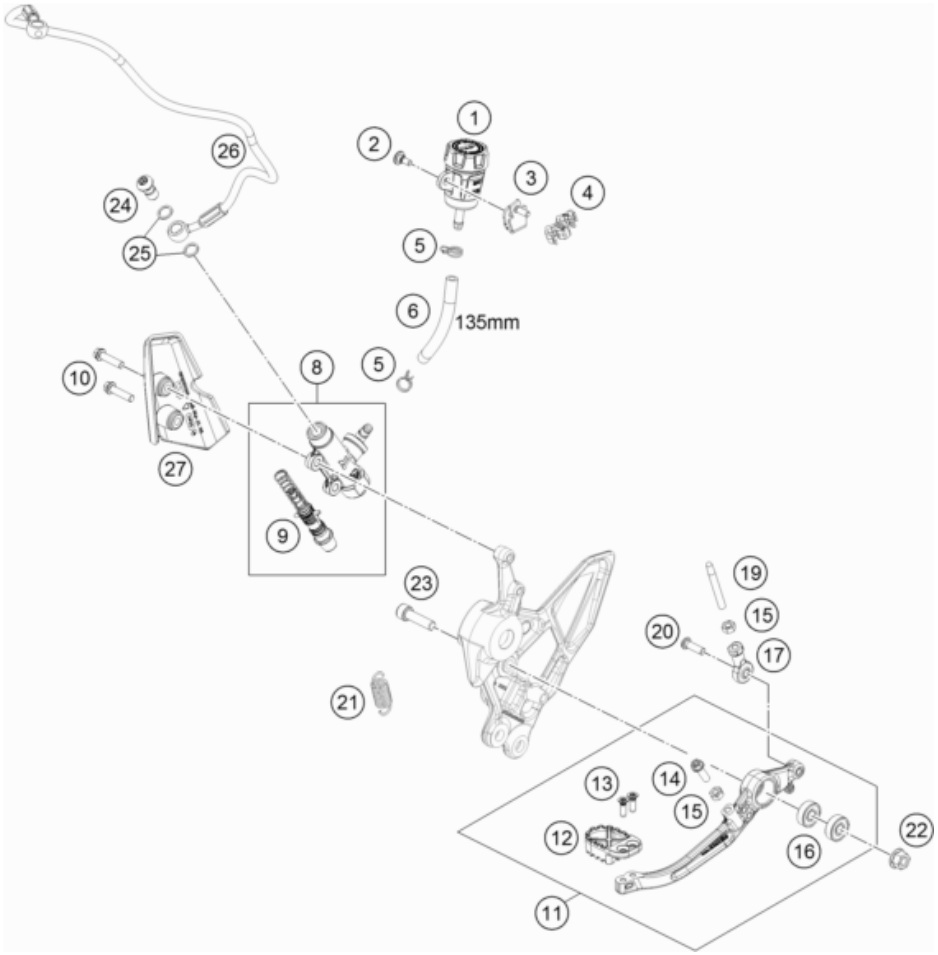

196351330

POS	PARTNUMBER		PIECE
1	64113069000	Reservoir assembly	1
2	69013099050	SCREW F. EXPANSION TANK	1
3	64113026000	Brake line holder	1
4	64142046000	Bracket ABS line dia7.5	1
5	58007017000	YDNAC CLAMP 10101 (10,4MM)	2
6	69013069001	HOSE FOR RESERVOIR 6X1,5	1
8	6411306000030	Foot master cylinder cpl. black	1
9	64113061000	Piston assembly	1
10	0025060256	HH collar screw M6x25 TX30	2
11	63513050033C1	Foot brake lever cpl. without push rod	1
12	63513051000	Footbrake lever step plate	1
13	014581050162	CS screw, ISO14581-M5x16-A2-070 ISA25	2
14	0025060206	HH collar screw M6x20 TX30	1
15	0934060003	hex nut DIN 934 M6	2
16	0625006087	GROOVED BALL BEAR. 608 2RS C3	2
17	54603069000	SWIVEL HEAD M6 FOOT BRAKE LEV.	1
19	54603068000	PRESSURE ROD ALU 250 '90	1
20	0738060205S	Oval head screw ISR M6x20-A2-70-MK	1
21	54603062200	Return spring for brake lever	1
22	54310086200	SELF LOCKING NUT M8 10.9	1
23	014579080301S	screw ISO 14579-M8x30-10.9-MK black	1
24	62113020100	banjo bolt M10x1x19.5	1
25	0603100141	sealing ring DIN 7603 10x14x1	2
26	63742002000	Brake line, rear master cylinder	1
27	63503039051	Rear master cylinder guard	1

57908

* NEW PART

X ON DEMAND

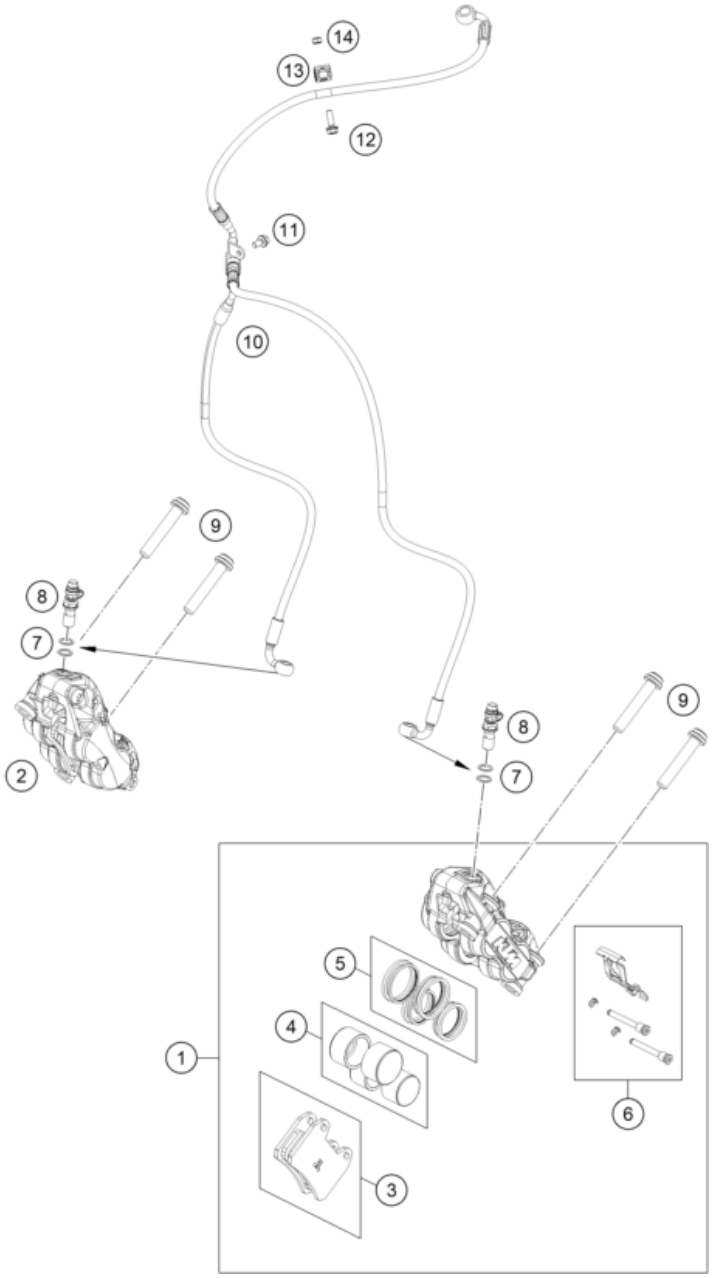

216371360

POS	PARTNUMBER		PIECE
1	63713115000	Brake caliper, front left	1
2	63713116000	Brake caliper, front right	1
3	63713030000	Front brake pad	2
4	63513019000	Piston set	2
5	63613021000	Seal set	2
6	64113017000	Retaining spring set	2
7	0603100141	sealing ring DIN 7603 10x14x1	4
8	62513020000	BLEEDER SCREW CPL. 05	2
9	0035100559S	AH-COLLAR SCREW M10X1,25X55SS	4
10	63542103000	Front brake line brake caliper	1
11	0025050106	HH collar screw M5x10 TX30	1
12	0025050166	HH collar screw M5x16 TX30	1
13	60113146000	SUPPORT FOR BRAKE HOSE M5	1
14	0985050003	SELF LOCKING NUT DIN0985-M 5	1

55726

* NEW PART

X ON DEMAND

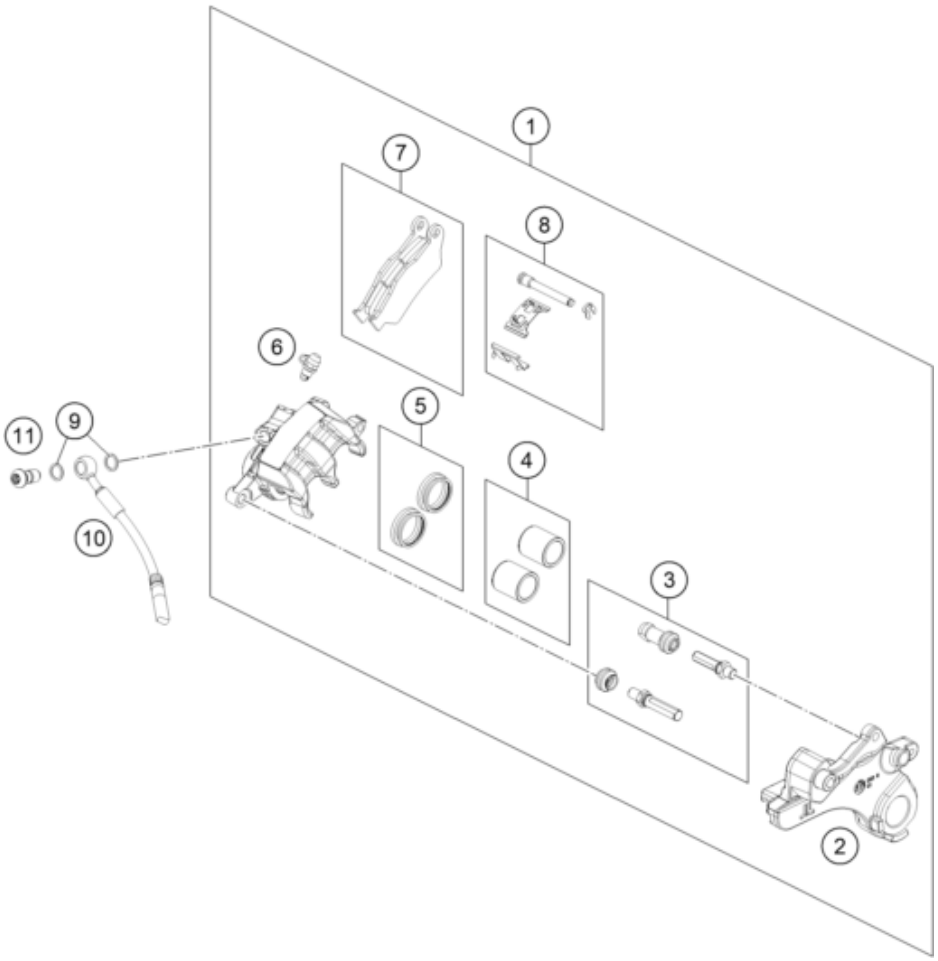

196351390

POS	PARTNUMBER		PIECE
1	63713080000	Rear brake caliper	1
2	63513075000	rear holder	1
3	64113084000	Cup set	1
4	63713083000	brake piston set	1
5	63513081000	Seal set	1
6	64113020000	Bleeder + cap	1
7	63713090000	rear brake pads	1
8	63513085000	Pad pin and spring	1
9	0603100141	sealing ring DIN 7603 10x14x1	2
10	63742004000	Brake line, rear brake caliper	1
11	62113020100	banjo bolt M10x1x19.5	1

57909

* NEW PART

X ON DEMAND

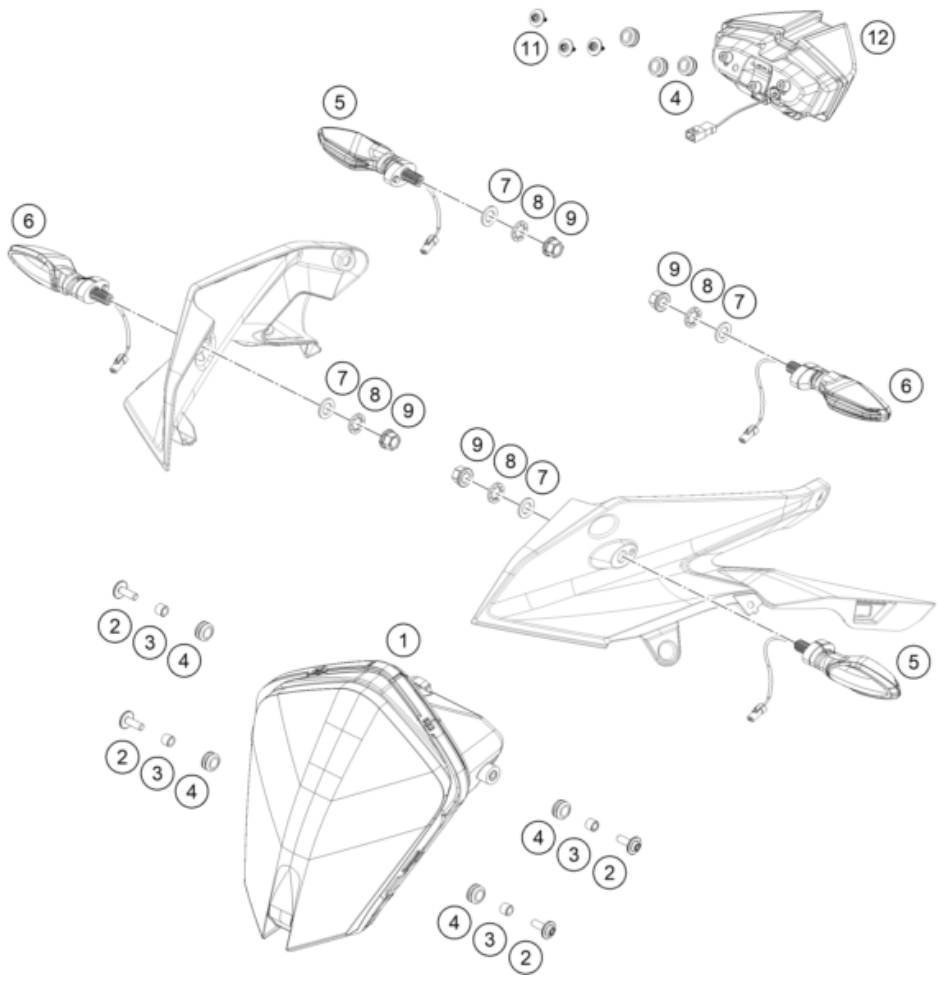

236371411

POS	PARTNUMBER		PIECE
1	A61014001000	Headlight	1
2	69014017000S	special screw M6x18-8.8 ISA30 MK	4
3	69014014000	BUSHING 6,1X9,2X7,5 08	4
4	60006001022	rubber grommet 9x11x16x8.5 mm	7
5	60314025000	turn signal front left/rear right	2
6	60314026000	turn signal front right/rear left	2
7	0433100003	WASHER 18x10,5x1,6	4
8	0797100003	LOCK WASHER DIN6797-J10,5 ZI	4
9	58414030000	HH COLLAR NUT M10X1,25 WS=13	4
11	0081645121	EJOT DELTA PT SCREW 45X12-Z	3
12	63514040000	Tail light	1

62172

* NEW PART

X ON DEMAND

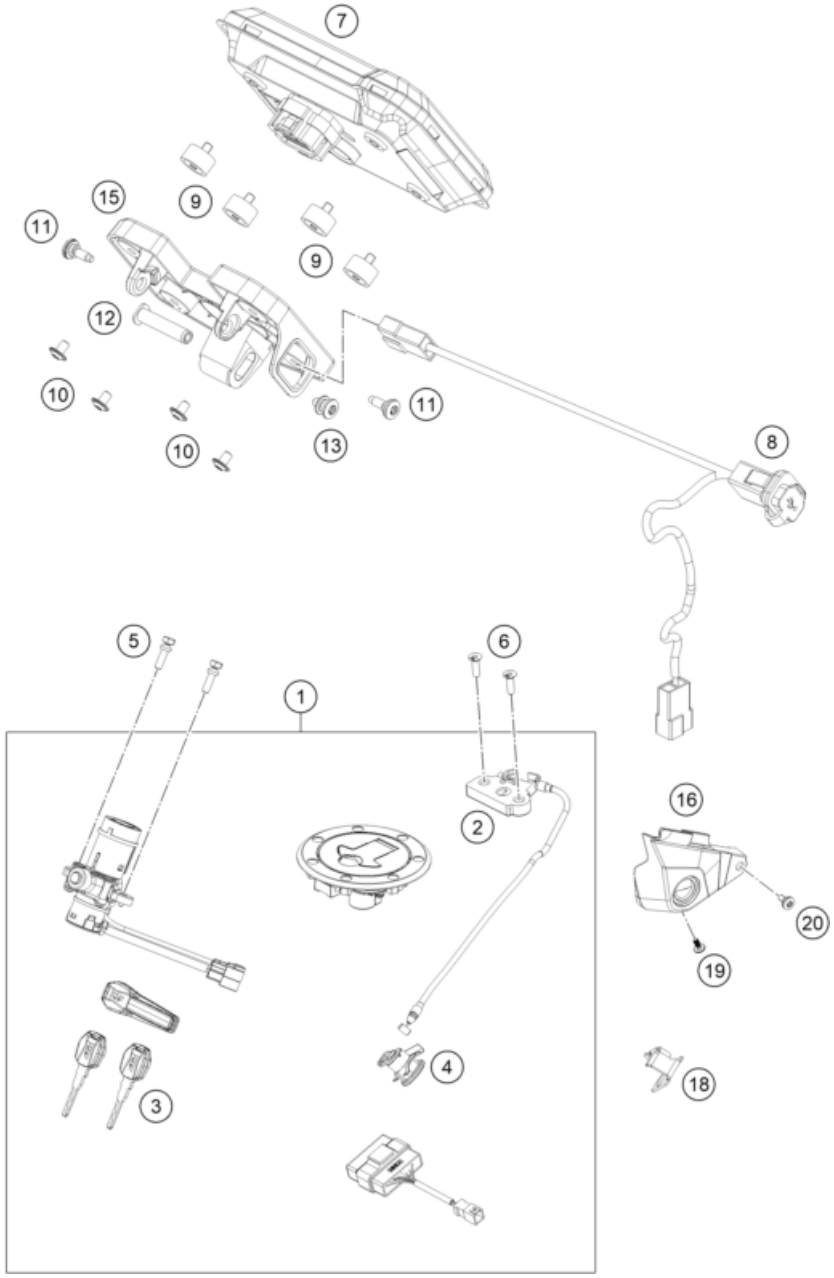

236371430

POS	PARTNUMBER		PIECE
1	A61011066044	Lock kit	1
2	63507050000	Seat lever assy	1
3	64111067000	KTM ignition key	1
3	64111067010	Blank Key KTM	x
4	90107050050	SEAT LOCK	1
5	76011064200	Tear-off screw M6 ignition lock ISA30 MK	2
6	0738060205S	Oval head screw ISR M6x20-A2-70-MK	2
7	22114069000	Combination instrument	1
8	64111043000	USB power socket 12 V	1
9	61614069010	Absorber Speedometer	4
10	073802050083	Oval head screw ISR M5x8-08.8	4
11	69008021060	special screw M5x17	2
12	61914010020	Bushing, speedometer attachment	1
13	69008021160	special screw M5x12	1
15	A61014060000	Dashboard support	1
16	63507050050	Lock cover	1
18	64107051000	Cable Bracket Lock	1
19	0081045121	SCREW FOR PLASTIC K45X12 T20	1
20	69008021160	special screw M5x12	1

62154

* NEW PART

X ON DEMAND

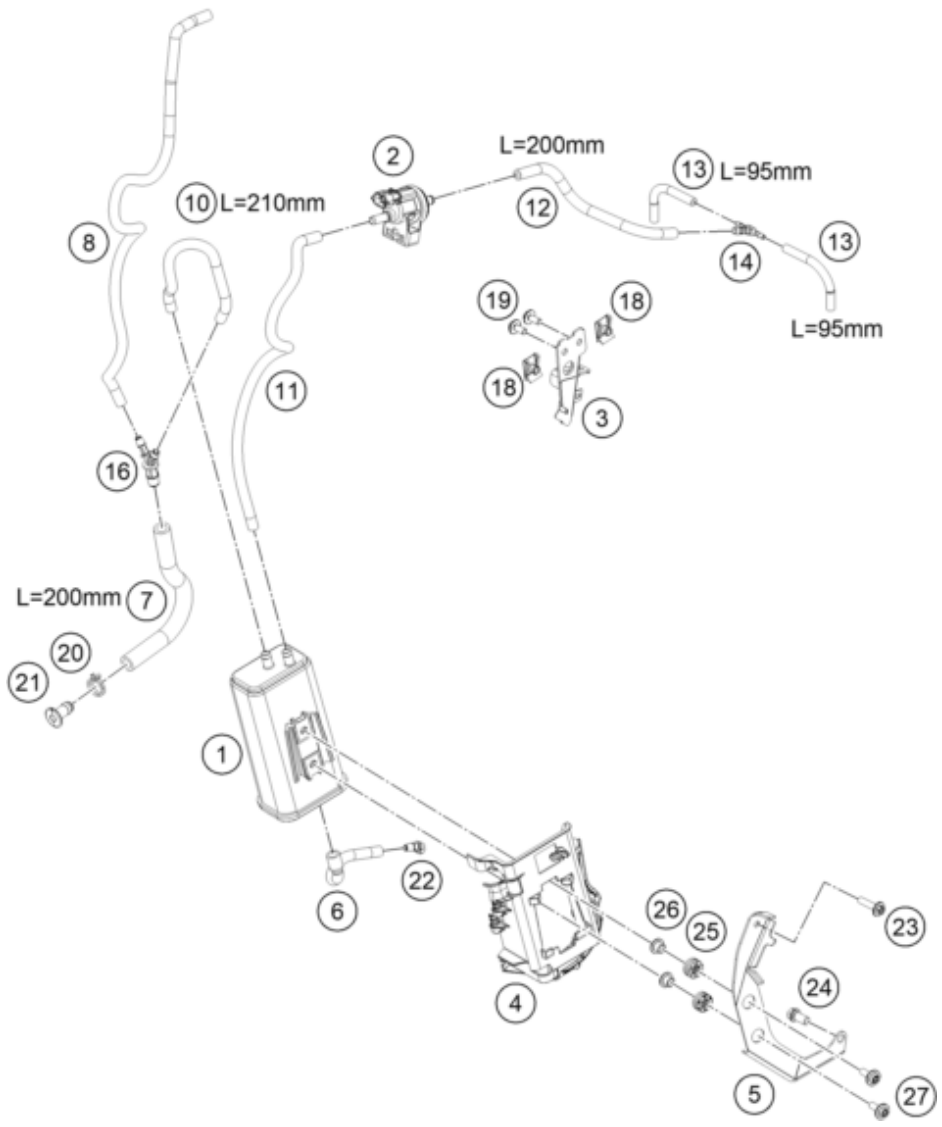

226371510

POS	PARTNUMBER		PIECE
1	75015001200	CARBON CANISTER	1
2	76015015000	EVAP valve	1
3	63515026010	Retaining bracket ACF valve cpl.	1
4	63515003010	Hose clip ACF	1
5	6351500201033	Retaining bracket ACF	1
6	A61015021000	Pre-formed hose, evap. can., bleeder	1
7	78015119000	HOSE EPA D=10/16 L=2000MM	1
8	63515024100	Fuel tank vent hose 688mm	1
10	78015019000	HOSE EPA D=6/10 L=2000MM	1
11	63515028100	Evaporative canister hose - purge valve	1
12	78015019000	HOSE EPA D=6/10 L=2000MM	1
13	78015021000	HOSE EPA D=4/8 L=2000MM	2
14	64115026000	Hose connection nozzles	1
16	61315028100	Y-CONNECTOR YS 6-10-6	1
18	54603048100	clip nut M6	2
19	0024060136	HH collar screw M6x13 TX30	2
20	58431082100	YDNAC-CLAMP 10173 (16MM) '98	1
21	61315026100	Screw plug ACF	1
22	63503098030	Angle piece for overrun	1
23	0024060256	HH COLLAR SCREW M6X25 TX30	1
24	0025060166	HH collar screw M6x16 TX30	1
25	62142041100	DUMPER 40 SHORE	2
26	00185006009U0	Collar bushing 6.1x9.2x15x8.5x1	2
27	69014017000	SPECIAL SCREW M6X18 ISA30 08	2

62210

* NEW PART

X ON DEMAND

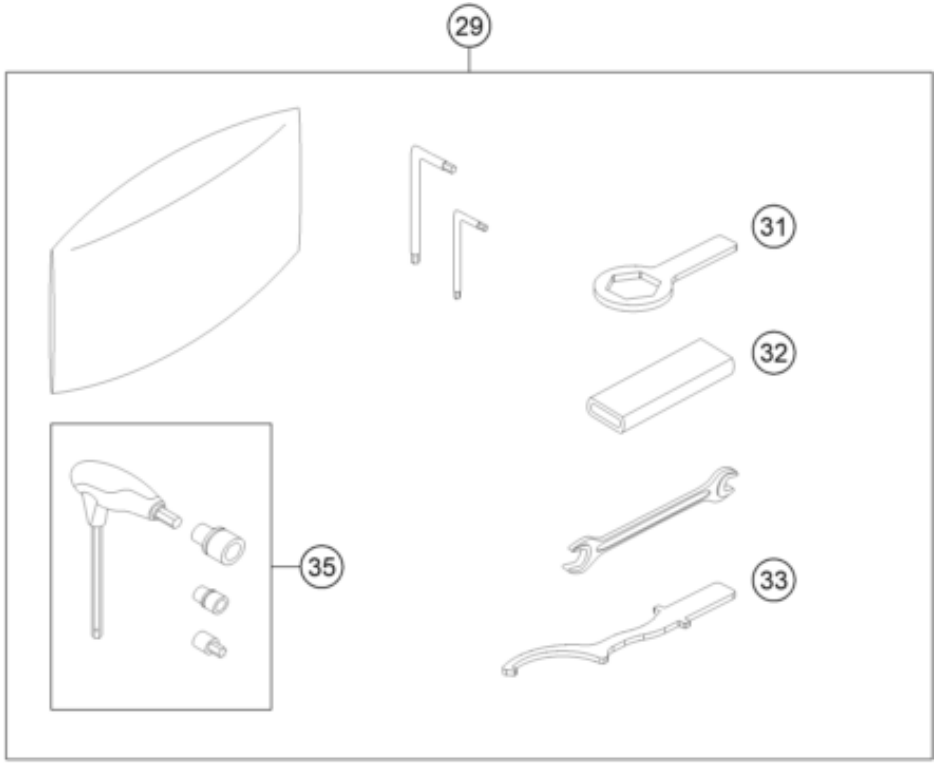

OHNE ABBILDUNG
WITHOUT ILLUSTRATION

0

TECHNISCHE DOKUMENTATION
TECHNICAL DOCUMENTATION
DOCUMENTACION TECNICA
DOCUMENTATION TECHNIQUE
NOTE TECNICHE

1

196352000

POS	PARTNUMBER		PIECE
0	58412040100	mirror, left/right	1
0	28512040000	mirror, right	1
0	0025060086	HH collar screw M6x8 TX30	2
0	A6100309000001	Skid plate	1
0	63503090016	Lower Alu Skidplate Support	1
0	0024060106	HH COLLAR SCREW M6X10 TX30	7
0	A61007025010	Tank protector left	1
0	83008000012	special screw M6x12x3	1
0	63503190017	Silent block 20x12 M6x10/M6x8	2
0	62142041000	DAMP. COMPONENT ABS MODUL	6
0	A61007025020	Tank protector right	1
0	69014117000	Collar screw M6x22-8.8 ISA30	6
0	54603048300	RANGE CHANGE METAL NUT M6 INOX	3
0	61342041100	Collar bushing 6,5x9x18x8,5	6
0	54603048300	RANGE CHANGE METAL NUT M6 INOX	3
0	A61008108000	Windshield R	1
0	60708008070	rubber bush windshield fixation	6
0	60708008071	Special screw M5x14	6
0	58412080400	Rear reflector red	1
0	64112181100	Bracket for reflector	1
0	75007046010	SEAT RUBBER 10 MM	2
0	60302180044AB	Handguard left cmpl.	1
0	60302181044AB	Handguard right cmpl.	1
0	00063004202	PRINT LABEL 60X51 MM	1
0	00063004012	HEADLIGHT MASK BOX	1
0	69008021160	special screw M5x12	1
0	00063004105	950 ADV. CARTON F WIND PROT.	1
0	0025050166S	HH Collar Screw M5x16 ISA30 SS	4
0	60408061050	RUBBER 14X6.5X2.3MM	2
1	3214753EN	Owner´s manual 890 ADVENTURE R '23	1
29	63729099000	Tool set	1
31	60012060032	RING WRENCH 32MM	1
32	60012060000	GRIP FOR RING WRENCH	1
33	76029062000	HOOK WRENCH F. SHOCK ABSORBER	1
35	50329070000	T-WRENCH WS=6/8/10 '97	1

62258

* NEW PART

X ON DEMAND

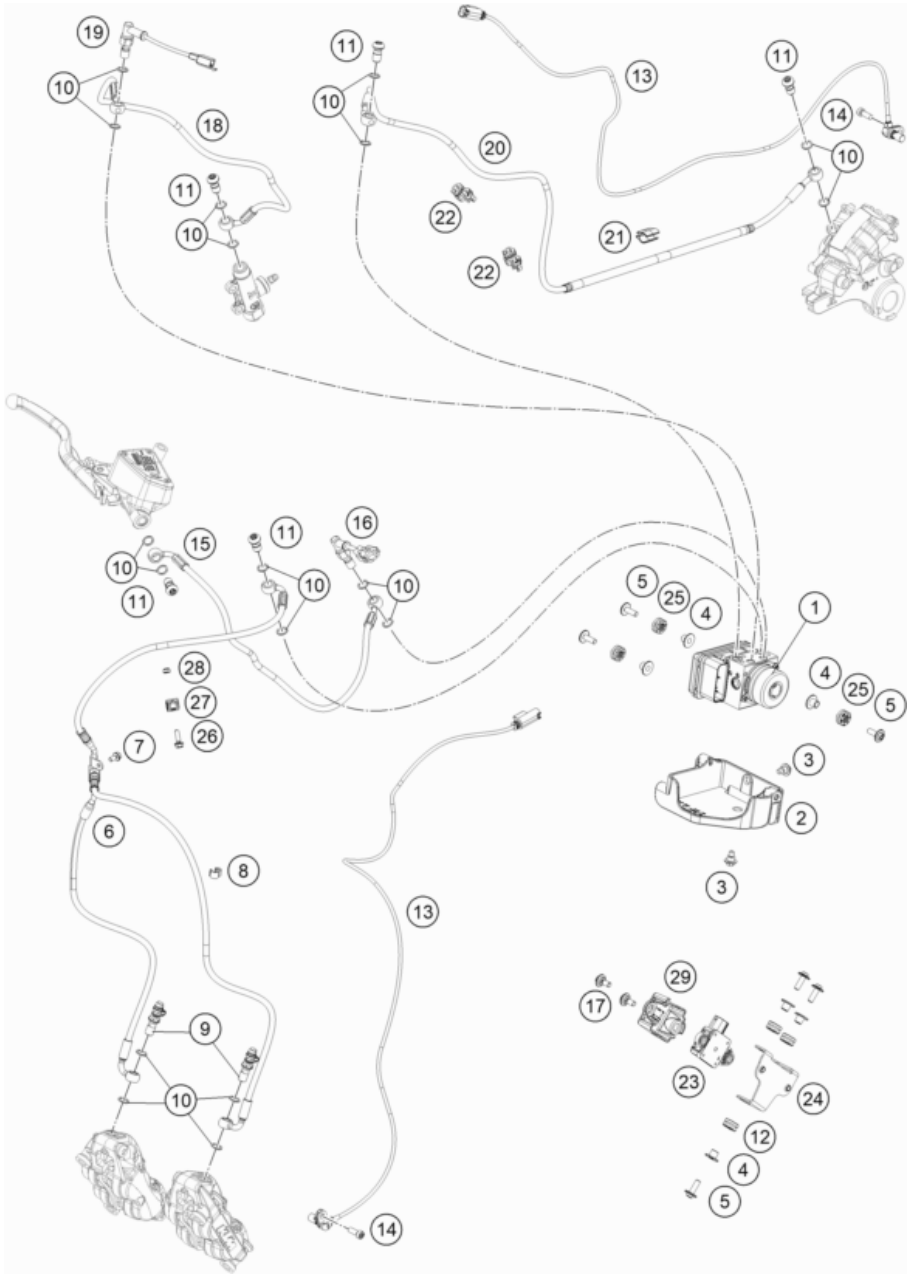

216374210

POS	PARTNUMBER		PIECE
1	61742031044	ABS module filled	1
2	63542040000	holder ABS module	1
3	59001092050	SPECIAL SCREW M6X12,5 WS=8	2
4	61342041000	COLLAR BUSH 6,5X9X18X8,5	6
5	69014017000	SPECIAL SCREW M6X18 ISA30 08	6
6	63542103000	Front brake line brake caliper	1
7	0025050106	HH collar screw M5x10 TX30	1
8	60111094100	BAR SPACER 4/7 BLACK	8
9	62513020000	BLEEDER SCREW CPL. 05	2
10	0603100141	sealing ring DIN 7603 10x14x1	18
11	62113020100	banjo bolt M10x1x19.5	5
12	62142041100	DUMPER 40 SHORE	3
13	76042125000	ABS-SENSOR	2
14	014580060166	SHCS ISO 14580 M6x16	2
15	63542001000	Brake line MC-ABS	1
16	64111051100	Brake light switch	1
17	83008000015	SPECIAL SCREW M6X15X3	2
18	63542002000	Brake line MC-ABS	1
19	62111051000	BRAKE LIGHT SWITCH REAR	1
20	63542004000	Brake links ABS-Caliper	1
21	54813026100	CABLE SUPPORT 10/4MM 2014	1
22	64142046000	Bracket ABS line dia7.5	2
23	61542090000	Angle sensor	1
24	63742090015	Retaining bracket angle sensor cmpl.	1
25	62142041000	DAMP. COMPONENT ABS MODUL	3
26	0025050166	HH collar screw M5x16 TX30	1
27	60113146000	SUPPORT FOR BRAKE HOSE M5	1
28	0985050003	SELF LOCKING NUT DIN0985-M 5	1
29	61342090050	COVER SENSOR BOX	1

59392

* NEW PART

X ON DEMAND

23A6108011

POS	PARTNUMBER		PIECE
1	50203098003	Sticker "WARNING LABEL 3"	1
2	50307098000	STICKER ''OWNERS MANUAL''	1
3	A61007096000	Fuse box sticker	1
4	A61006098100	STD setting sticker	1
5	64104099100	Sticker chain tension	1
6	A61003095000	ECE sticker	1
7	21007098000	Sticker fuel labelling	1
8	21003094000	"Sticker ""EAC"""	1
9	A61003097100	Technical information sticker	1
10	LI21-637-2A	Type label, EURO 4 KTM	1

62063

* NEW PART

X ON DEMAND

KTM.COM

F9703W7EN

Art. Nr.: F9703W7EN 27. Okt 2022

KTM Sportmotorcycle GmbH
5230 Mattighofen, Austria
www.ktm.com

KTM_POWERPARTS KTM_POWERWEAR KTM_ORIGINAL SPARE PARTS