OWNER'S MANUAL 2009

400 EXC EU
400 EXC AUS
400 XC-W USA
450 EXC EU
450 EXC AUS
450 EXC SIX DAYS EU
450 XC-W USA
450 XC-W ZA
530 EXC EU
530 EXC AUS
530 EXC SIX DAYS EU
530 XC-W USA
530 XC-W ZA

ART. NO. 3211355en

DEAR KTM CUSTOMER

Congratulations on your decision to purchase a KTM motorcycle. You are now the owner of a state-of-the-art sports motorcycle that will give you enormous pleasure if you service and maintain it accordingly.

We wish you great pleasure riding the vehicle!

Enter the serial numbers of your vehicle below.

Chassis number (☛ p. 9)	Dealer's stamp
Engine number (☛ p. 9)	
Key number (all EXC models) (☛ p. 9)	

The owner's manual corresponded to the latest state of this series at the time of printing. Slight deviations resulting from continuing development and design of our motorcycles can however not be completely excluded.

All specifications are not binding. KTM Sportmotorcycle AG specifically reserves the right to modify or delete technical specifications, prices, colors, forms, materials, services, designs, equipment, etc., without prior notice and without specifying reasons, to adapt these to local conditions, as well as to stop production of a particular model without prior notice. KTM accepts no liability for delivery options, deviations from illustrations and descriptions, as well as printing and other errors. The models portrayed partly contain special equipment that does not belong to the regular scope of delivery.

ISO 9001(12 100 6061)
Within the meaning of the international quality management standard ISO 9001, KTM uses quality assurance processes that lead to the maximum possible quality of the products.
Issued by: TÜV Management Service

KTM-Sportmotorcycle AG
5230 Mattighofen, Austria

Symbols used

The symbols used are explained in the following.

✓	Indicates an expected reaction (e.g. of a work step or a function).
✗	Indicates an unexpected reaction (e.g. of a work step or a function).
🔧	All work marked with this symbol requires specialist knowledge and technical understanding. In the interest of your own safety, have these jobs done in an authorized KTM workshop! There, your motorcycle will be serviced optimally by specially trained experts using the specialist tools required.
☛	Identifies a page reference (more information is provided on the specified page).

Formats used

The typographical and other formats used are explained in the following.

Specific name	Identifies a specific name.
Name®	Identifies a protected name.
Brand™	Identifies a brand in merchandise traffic.

Use definition (all EXC models)

KTM sport motorcycles are designed and built to withstand the normal stresses and strains of competitive use. The motorcycles comply with currently valid regulations and categories of the top international motorsport organizations.

Info
The motorcycle is authorized for public road traffic in the homologous (reduced) version only.
In the derestricted version, the motorcycle must be used only on secluded property remote from public road traffic.
The motorcycle is designed for off-road sport endurance competition (Enduro) and not for the predominant motocross use.

Use definition (all XC-W models)

KTM sport motorcycles are designed and built to withstand the normal stresses and strains of competitive use. The motorcycles comply with currently valid regulations and categories of the top international motorsport organizations.

Info
The motorcycle must be used only on secluded property remote from public road traffic.
The motorcycle is designed for off-road sport endurance competition (Enduro) and not for the predominant motocross use.

Maintenance

A prerequisite for perfect operation and prevention of wear is that the engine and chassis maintenance and adjustment work described in the owner's manual are properly carried out. Poor adjustment and tuning of the engine and chassis can lead to damage and breakage of components.
Using the motorcycle in extreme conditions such as very muddy or wet terrain can lead to above-average wear of components such as the transmission train or the brakes. For this reason, it may be necessary to service or replace worn parts before the limit specified in the service schedule is reached.
Pay careful attention to the prescribed running-in period, inspection and maintenance intervals. If you observe these exactly, you will ensure a much longer service life for your motorcycle.

Warranty

The work prescribed in the service schedule must be carried out in an authorized KTM workshop and confirmed in the customer's service record, since otherwise no warranty claims will be recognized. No warranty claims can be considered for damage resulting from manipulations and/or alterations to the vehicle.

Fuel, oils, etc.

You should use the fuels, oils and greases according to specifications as listed in the owner's manual.

Spare parts, accessories

For your own safety, only use spare parts and accessory products that are approved and/or recommended by KTM and have them installed by an authorized KTM workshop. KTM accepts no liability for other products and any resulting damage or loss.

The current **KTM PowerParts** for your vehicle can be found on the KTM website.
International KTM Website: http://www.ktm.com

Work rules

When the vehicle is assembled, non-reusable parts (e.g., self-locking screws and nuts, gaskets, seal rings, O-rings, splints, lock washers) must be replaced with new parts.
Where thread lockers are used on screw connections (e.g., **Loctite®**), follow the instructions for use from the manufacturer.
After disassembly, clean the parts that are to be reused and check them for damage and wear. Replace damaged or worn parts.
After you complete the repair or maintenance work, check the roadworthiness of the vehicle.

Transport

Note
Danger of damage Danger of damage by the vehicle running away or falling over.

– Always place the vehicle on a firm and even surface.

Note
Fire hazard Some components (engine, radiator and exhaust system) get very hot when the engine is running.

– Do not place the vehicle where there are flammable or explosive substances.

– switch off engine.

- Turn handle ❶ of the fuel tap to the **OFF** position. (Figure 500137-10☛ p. 20)
- Use straps or other suitable devices to secure the motorcycle against accidents or falling over.

Environment

Offroad motorcycling is a wonderful sport and we naturally hope that you will be able to enjoy it to the fullest. However, it is a potential problem for the environment and can lead to conflicts with other persons. But if you use your motorcycle responsibly, you can ensure that such problems and conflicts do not have to occur. To protect the future of motorcycle sport, make sure that you use your motorcycle legally, display environmental consciousness, and respect the rights of others.

Notes/warnings

Be sure to pay attention to the notes and warnings given here.

Info
Various notes and warning stickers are attached to the vehicle. Do not remove any notes and warning stickers. If they are missing, you or others may not recognize dangers and may therefore be injured.

Grades of risks

Danger
Danger that leads immediately and certainly to severe and permanent injury or death.

Warning
Danger that will probably lead to severe and permanent injury or death.

Note
Danger of serious damage to machine or material.

Warning
Risk of environmental damage.

OWNER'S MANUAL

- It is important that you read this owner's manual carefully and completely before making your first trip. It contains useful information and many tips on how to operate and handle your motorcycle. Only then will you find out how to best customize the motorcycle for your own use and how you can protect yourself from injury. The owner's manual also contains important information on servicing the motorcycle.
- The owner's manual is an important component of the motorcycle and should be handed over to the new owner if the vehicle is sold.

View of the vehicle from the left front (example)

1	Side stand
2	Shift lever
3	Chain guide
4	Fuel tap
5	Air filter box lid
6	Clutch lever
7	Hand brake lever

View of the vehicle from the right rear (example)

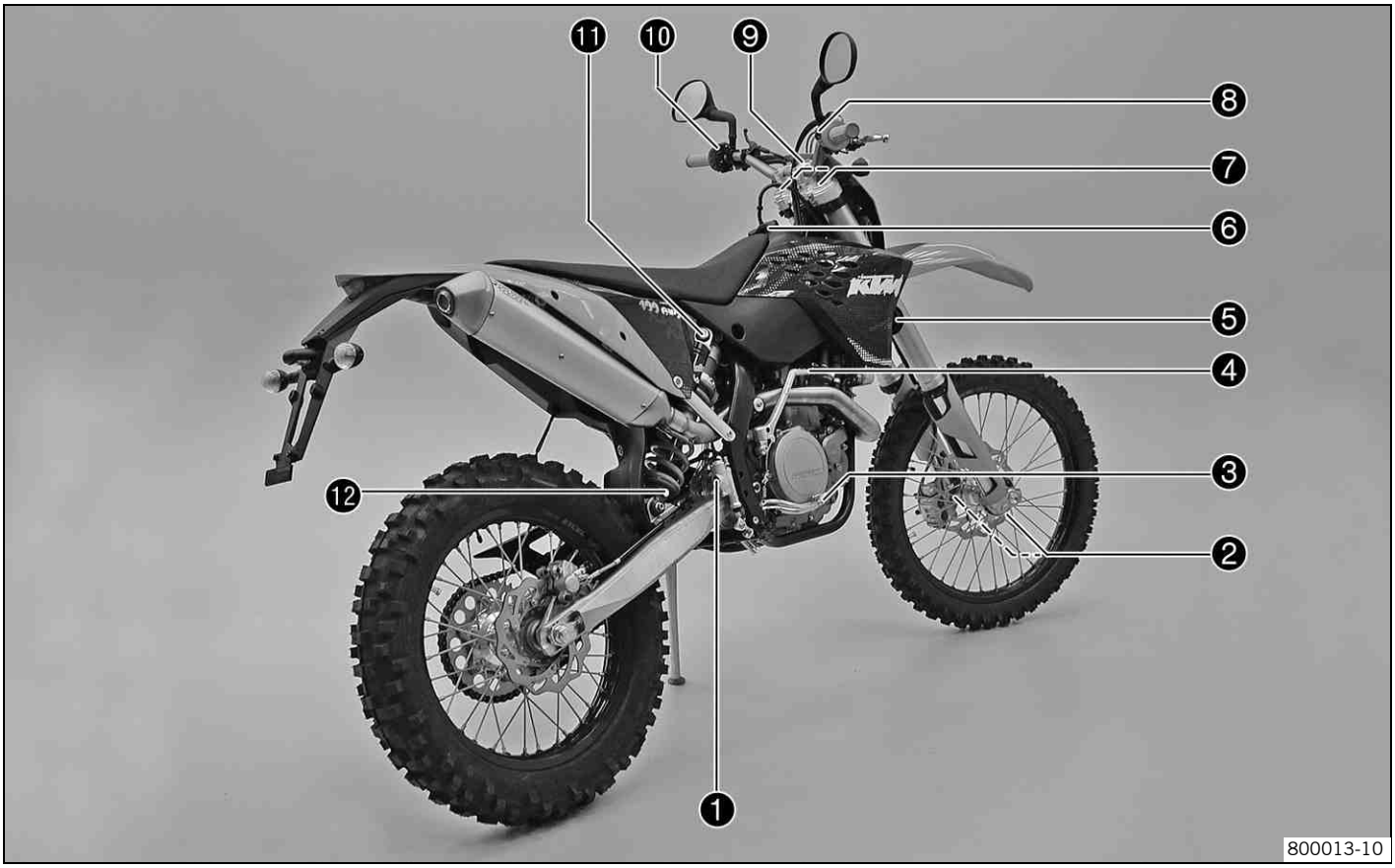

1	Level viewer for brake fluid, rear
2	Fork compression adjustment
3	Foot brake pedal
4	Kickstarter
5	Horn
6	Filler cap
7	Fork rebound adjustment
8	Electric starter button
9	Speedometer
10	Short circuit button
11	Shock absorber compression adjustment
12	Shock absorber rebound adjustment

Chassis number

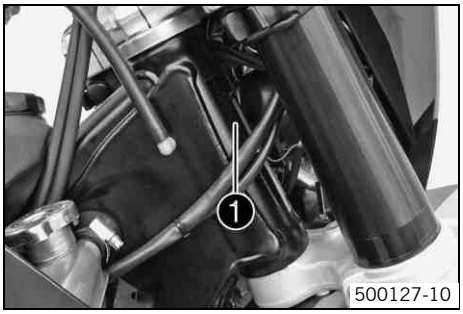

The chassis number ❶ is stamped on the steering head on the right.

Type label

The type label ❶ is fixed to the front of the steering head.

Key number (all EXC models)

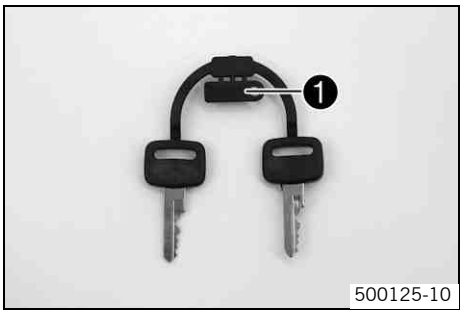

The key number ❶ is stamped on the key strap.

Engine number

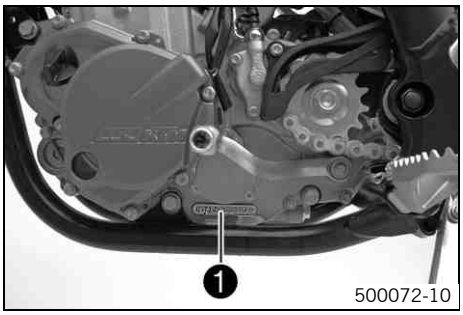

The engine number ❶ is stamped on the left side of the engine under the engine sprocket.

Fork part number

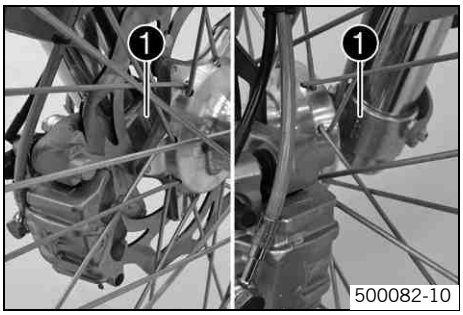

The fork part number ❶ is stamped on the inner side of the fork stub.

Shock absorber part number

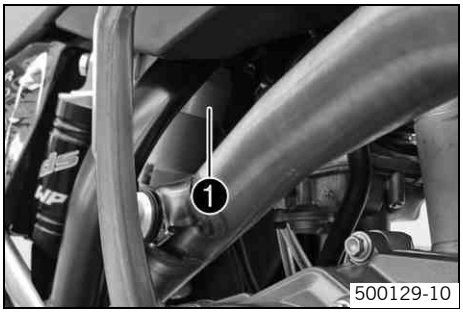

The shock absorber part number ❶ is stamped on the top of the shock absorber above the adjusting ring on the engine side.

Clutch lever

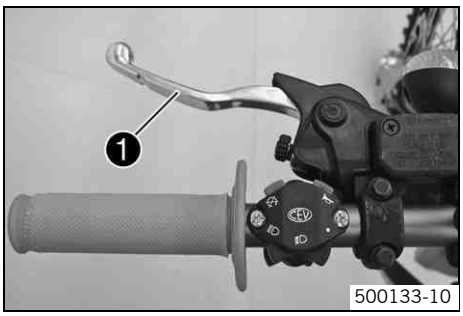

The clutch lever ❶ is fitted on the left side of the handlebar.
The clutch is hydraulically operated and self-adjusting.

Hand brake lever

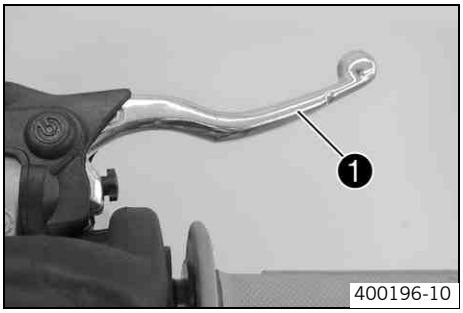

Hand brake lever ❶ is located on the right side of the handlebar.
The hand brake lever is used to activate the front brake.

Short circuit button (all XC-W models)

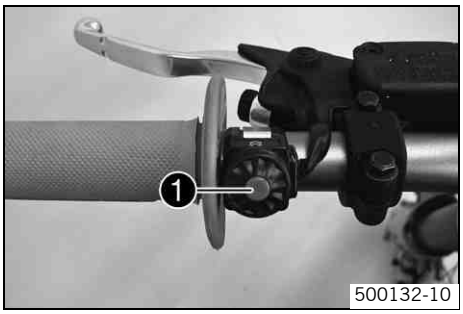

The short circuit button ❶ is fitted on the left side of the handlebar.

Possible states

- Short circuit button ⊗ in basic position – In this position, the ignition circuit is closed, and the engine can be started.
- Short circuit button ⊗ pressed – In this position, the ignition circuit is interrupted, a running engine stops, and a non-running engine will not start.

Short circuit button (all EXC models)

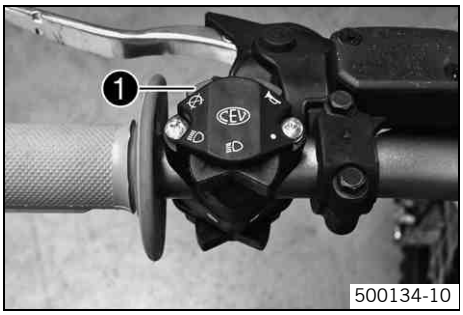

The short circuit button ❶ is fitted on the left side of the handlebar.

Possible states

- Short circuit button ⊗ in basic position – In this position, the ignition circuit is closed, and the engine can be started.
- Short circuit button ⊗ pressed – In this position, the ignition circuit is interrupted, a running engine stops, and a non-running engine will not start.

Emergency OFF switch (EXC AUS)

The emergency OFF switch ❶ is fitted on the left side of the handlebar.

Possible states

Ignition off – In this position, the ignition circuit is interrupted, a running engine stops, and a non-running engine will not start.

Ignition on – In this position, the ignition circuit is closed, and the engine can be started.

Electric starter button (EXC EU, EXC SIX DAYS, XC-W)

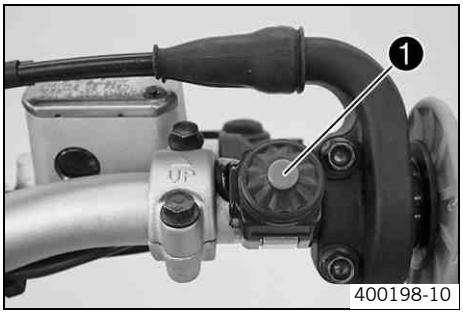

The electric starter button ❶ is fitted on the right side of the handlebar.

Possible states

- Electric starter button in basic position
- Electric starter button pressed – In this position, the electric starter is actuated.

Electric starter button (EXC AUS)

The electric starter button ❶ is fitted on the right side of the handlebar.

Possible states

- Electric starter button in basic position
- Electric starter button pressed – In this position, the electric starter is actuated.

Light switch (all EXC models)

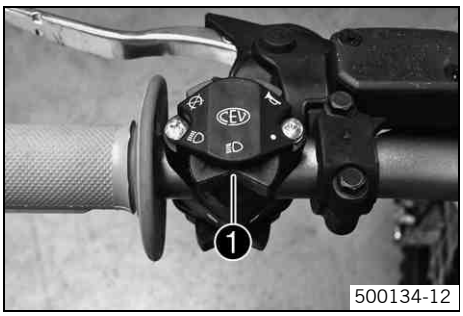

The light switch ❶ is fitted on the left side of the handlebar.

Possible states

●	Light off – Light switch is turned to the right. In this position, the light is switched off.
	Low beam on – Light switch is in the central position. In this position, the low beam and tail light are switched on.
	High beam on – Light switch is turned to the left. In this position, the high beam and the tail light are switched on.

Light switch (all XC-W models)

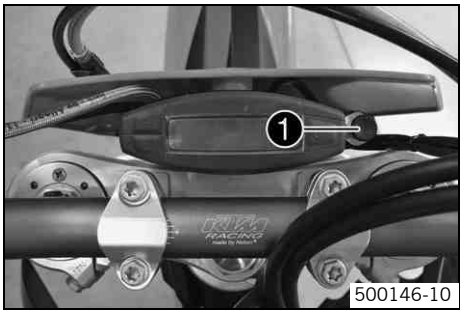

The light switch ❶ is on the right of the speedometer.

Possible states

(XC-W ZA)

- Light off – Light switch is pressed in up to the stop. In this position, the light is switched off.
- Light on – Light switch is pulled out to the stop. In this position, the low beam and the tail light are switched on.

(XC-W USA)

- The light switch has no function when delivered. – It can be used if lighting is fitted later.

Horn button (all EXC models)

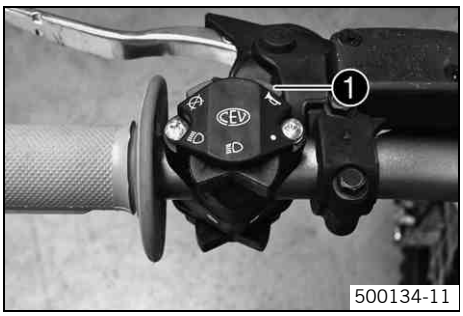

The horn button ❶ is fitted on the left side of the handlebar.

Possible states

- Horn button in neutral position
- Horn button pressed – The horn is operated in this position.

Flasher switch (all EXC models)

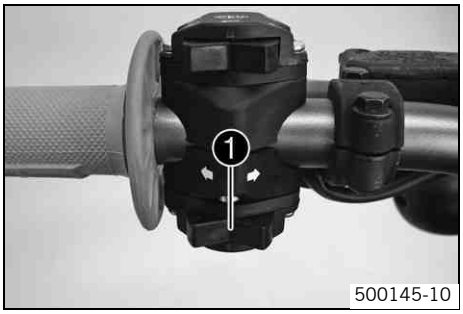

500145-10

Flasher switch ❶ is fitted on the left side of the handlebar.

Possible states

Flasher light off – Flasher switch is in the central position.
Flasher light, left, on – Flasher switch turned to the left.

Flasher light, right, on – Flasher switch turned to the right.

Overview of indicator lamps (all EXC models)


500147-01

Possible states

High beam indicator lamp lights up blue – High beam is switched on.

Flasher indicator lamp flashes green – Flasher light is switched on.

Speedometer

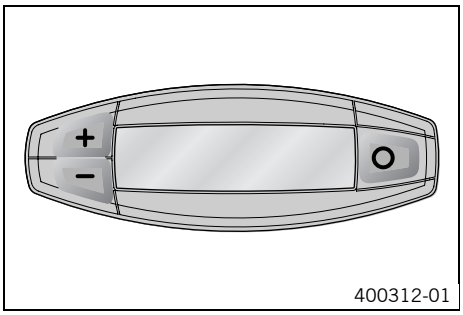

400312-01

- Press the key ○ to change the display mode or change to one of the setup menus.
- Press the button + to control different functions.
- Press the button – to control different functions.

Info
In its condition at delivery, the display mode **SPEED/H** and**SPEED/ODO** is activated.

Speedometer activation and test

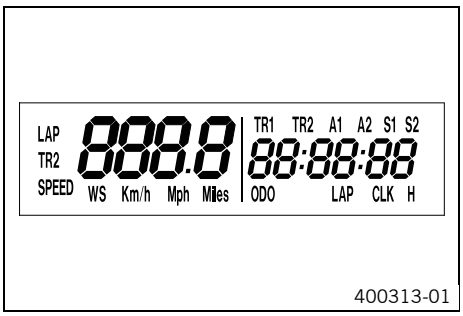

400313-01

Activating the speedometer:
The speedometer is activated when one of the keys is pressed or an impulse comes from the wheel speed sensor.
Display test
For the function test of the display, all display segments light up briefly.

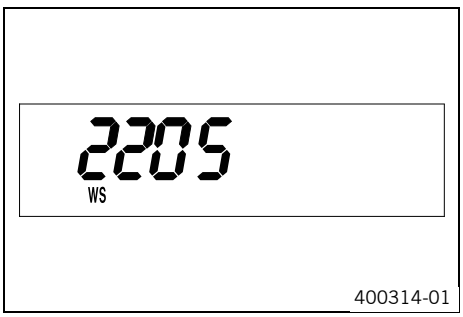

400314-01

WS (wheel size)
After the display function test, the wheel size **WS** is displayed briefly.

Info
2205 mm corresponds to the size of the 21" front wheel with a series production tire.

The display then changes to the last selected mode.

Tripmaster switch

(Option: Tripmaster switch)

You can use the trip master switch to control the functions of the speedometer from the handlebar.

Info
The trip master is an optional accessory.

Setting kilometers or miles

Info
If you change the unit, the value **ODO** is retained and converted accordingly.
The values **TR1**, **TR2**, **A1**, **A2** and **S1** are cleared when the unit of measure is changed.

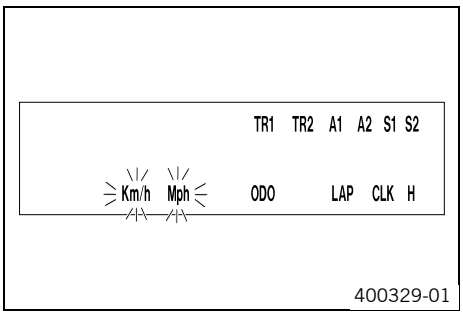

Condition
The motorcycle is standing.

– Press the button briefly and repeatedly until **H** appears at the bottom right of the display.
– Press the button for 3 - 5 seconds.
  ✔ The Setup menu opens and the active functions are displayed.
– Press the button repeatedly until the **Km/h**/**Mph** display flashes.

Km/hadjusting
– Press the button +.

Mphadjusting
– Press the button −.

– Press the button for 3 - 5 seconds.
  ✔ The settings are saved and the Setup menu closed.

Info
If no button is pressed for 20 seconds, or if no impulse comes from the wheel speed sensor, the settings are automatically saved and the Setup menu closed.

Setting the clock

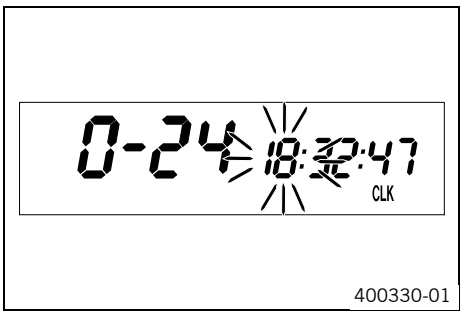

Condition
The motorcycle is standing.

– Press the button briefly and repeatedly until **CLK** appears at the bottom right of the display.
– Press the button for 3 - 5 seconds.
  ✔ The hour display flashes.
– Set the hour display with the button + and/or button −.
– Press the button briefly.
  ✔ The next segment of the display flashes and can be set.
– You can set the following segments in the same way as the hours by pressing the button + and the button −.

Info
The seconds can only be set to zero.

– Press the button for 3 - 5 seconds.
  ✔ The settings are saved and the Setup menu closed.

Info
If no button is pressed for 20 seconds, or if no impulse comes from the wheel speed sensor, the settings are automatically saved and the Setup menu closed.

Adjusting the speedometer functions

Info
Upon delivery, only the **SPEED/H** and **SPEED/ODO** display modes are activated.

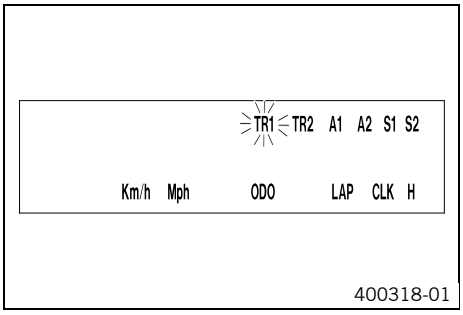

Condition
The motorcycle is standing.

– Press the button briefly and repeatedly until **H** appears at the bottom right of the display.
– Press the button for 3 - 5 seconds.
  ✔ The Setup menu opens and the active functions are displayed.
– Switch to the function you require by briefly pressing the button .
  ✔ The selected function flashes.

Activating a function
– Press the button +.
  ✔ The icon remains in the display and the display changes to the next function.

Deactivating a function
– Press the button –.
  ✔ The icon disappears from the display and the display changes to the next function.
– Activate or deactivate all functions accordingly.
– Press the button for 3 - 5 seconds.
  ✔ The settings are saved and the Setup menu closed.

Info
If no button is pressed for 20 seconds, or if no impulse comes from the wheel speed sensor, the settings are automatically saved and the Setup menu is closed.

Querying the lap time

Info
This function can be called only if lap times are measured.

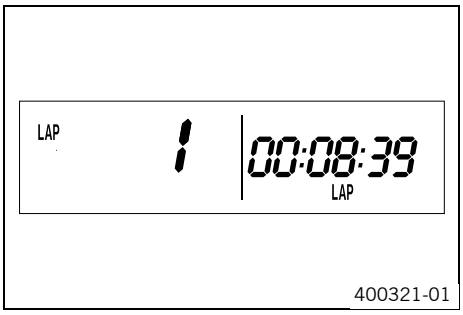

Condition
The motorcycle is standing.

– Press the button briefly and repeatedly until **LAP** appears at the bottom right of the display.
– Press the button briefly.
  ✔ **LAP 1** appears on the left side of the display.
– Laps 1-10 can be displayed by pressing the button +.
– The – button has no function
– Press the button briefly.
  ✔ Next display mode

Info
If an impulse is received from the wheel speed sensor, the left side of the display changes back to the **SPEED** mode.

SPEED display mode (speed)

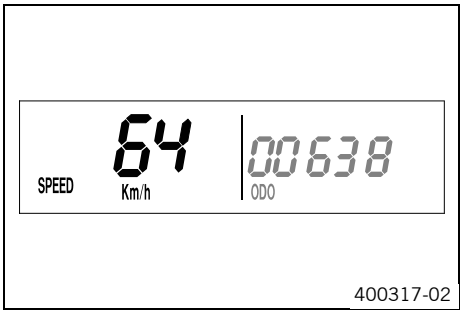

– Press the button briefly and repeatedly until **SPEED** appears on the left side of the display.

The current speed is displayed in the **SPEED** display mode.
The current speed can be displayed in **Km/h** or **Mph**.

Info
Making the setting according to the country.
When an impulse comes from the front wheel, the left side of the speedometer display changes to the **SPEED** mode and the current speed is shown.

SPEED/H display mode (service hours)

Condition
- Vehicle at a standstill

– Press the button briefly and repeatedly until **H** appears at the bottom right of the display.

The number of service hours of the engine is shown in the **H** display mode.
The service hour counter stores the total traveling time.

Info
The service hour counter is necessary for ensuring that maintenance work is carried out at the right intervals.
If the speedometer is in the **H** display mode at the start of the trip, it automatically changes to the **ODO** display mode.
The **H** display mode is suppressed during travel.

Press the button +.	No function
Press the button –.	No function
Press the button for 3 - 5 seconds.	The display changes to the Setup menu of the speedometer functions.
Press the button briefly.	next display mode

SPEED/CLK display mode (time)

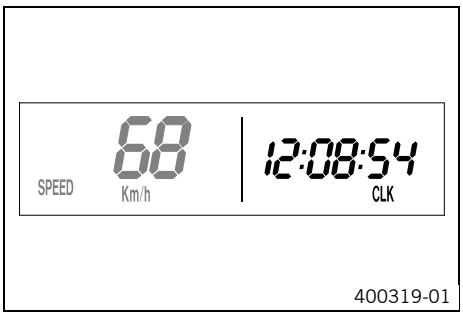

– Press the button briefly and repeatedly until **CLK** appears at the bottom right of the display.

The time is displayed in the **CLK** display mode.

Press the button +.	No function
Press the button –.	No function
Press the button for 3 - 5 seconds.	The display changes to the Setup menu of the clock.
Press the button briefly.	next display mode

SPEED/LAP display mode (lap time)

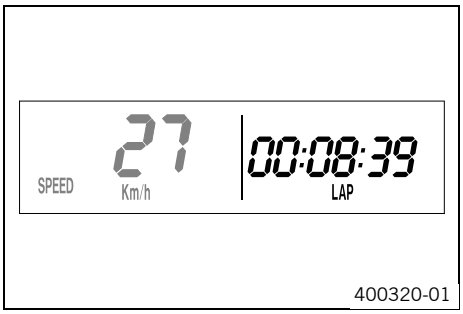

– Press the button briefly and repeatedly until **LAP** appears at the bottom right of the display.

In the **LAP** display mode, up to ten laps can be timed with the stop watch.

Info
If the lap time continues after you press the button –, 9 memory locations are already occupied.
Lap 10 must be timed with the button +.

Press the button +.	Starts or stops the clock.
Press the button –.	Stops the current lap time and saves it, and the stop watch starts the next lap.
Press the button for 3 - 5 seconds.	The stop watch and the lap time are reset.

Press the button ○ briefly. next display mode

SPEED/ODO display mode (odometer)

400317-01

– Press the button ○ briefly and repeatedly until **ODO** appears at the bottom right of the display.

The total number of kilometers ridden is shown in the **ODO** display mode.

Press the button +. No function
Press the button −. No function
Press the button ○ for 3 - 5 seconds. –
Press the button ○ briefly. next display mode

SPEED/TR1 display mode (trip master 1)

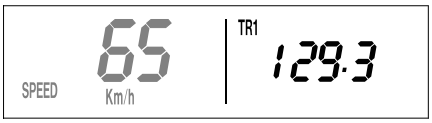

400323-01

– Press the button ○ briefly and repeatedly until **TR1** appears at the top right of the display.

TR1 (trip master 1) runs constantly and counts to 999.9.
You can use it to measure trips or the distance between refueling stops.
TR1 is coupled with **A1** (average speed 1) and **S1** (stop watch 1).

Info
If 999.9 is exceeded, the values of **TR1**, **A1** and **S1** are automatically reset to 0.0.

Press the button +. No function
Press the button −. No function
Press the button ○ for 3 - 5 seconds. The **TR1**, **A1** and **S1** displays are reset to 0.0.
Press the button ○ briefly. next display mode

SPEED/TR2 display mode (trip master 2)

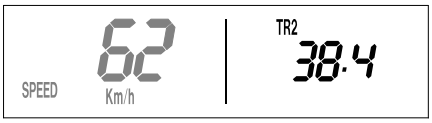

400324-01

– Press the button ○ briefly and repeatedly until **TR2** appears at the top right of the display.

TR2 (trip master 2) runs constantly and counts to 999.9.
The displayed value can be set manually with the button + and the button −. A very practical function for rides by the road book.

Info
The **TR2** value can also be corrected manually during the trip using the button + and the button −.
If 999.9 is exceeded, **TR2** is automatically reset to 0.0.

Press the button +. Increases value **TR2**.
Press the button −. Decreases value **TR2**.
Press the button ○ for 3 - 5 seconds. Clears value **TR2**.
Press the button ○ briefly. next display mode

SPEED/A1 display mode (average speed 1)

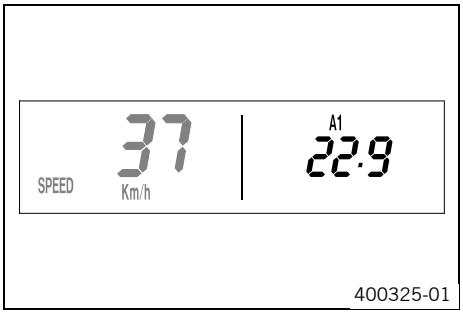

– Press the button briefly and repeatedly until **A1** appears at the top right of the display.

A1 (average speed 1) shows the average speed calculated on the basis of **TR1** (trip master 1) and **S1** (stop watch 1).
The calculation of this value is activated by the first impulse of the wheel speed sensor and ends 3 seconds after the last impulse.

Press the button +. No function
Press the button –. No function
Press the button for 3 - 5 seconds. The **TR1**, **A1** and **S1** displays are reset to 0.0.
Press the button briefly. next display mode

SPEED/A2 display mode (average speed 2)

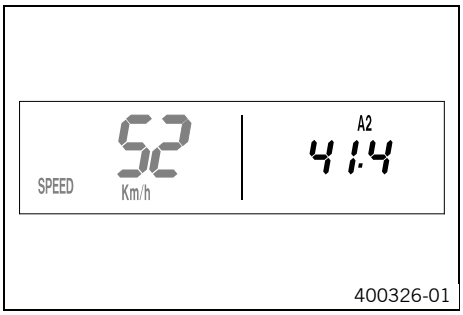

– Press the button briefly and repeatedly until **A2** appears at the top right of the display.

A2 (average speed 2) shows the average speed on the basis of the current speed if the stop watch **S2** (stop watch 2) is running.

Info
The displayed value can differ from the actual average speed if **S2** is not stopped after the ride.

Press the button +. No function
Press the button –. No function
Press the button for 3 - 5 seconds. –
Press the button briefly. next display mode

SPEED/S1 display mode (stop watch 1)

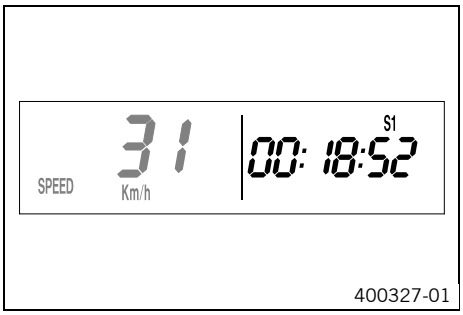

– Press the button briefly and repeatedly until **S1** appears at the top right of the display.

S1 (stop watch 1) shows the trip time on the basis of **TR1** and continues running when an impulse is received from the wheel speed sensor.
The calculation of this value starts with the first impulse of the wheel speed sensor and ends three seconds after the last impulse.

Press the button +. No function
Press the button –. No function
Press the button for 3 - 5 seconds. The **TR1**, **A1** and **S1** displays are reset to 0.0.
Press the button briefly. next display mode

SPEED/S2 display mode (stop watch 2)

– Press the button briefly and repeatedly until **S2** appears at the top right of the display.

S2 (stop watch 2) is a manual stop watch.
If **S2** is running in the background, the **S2** display flashes in the speedometer display.

Press the button +. Starts or stops **S2**.
Press the button –. No function
Press the button for 3 - 5 seconds. The **S2** and **A2** displays are reset to 0.0.
Press the button briefly. next display mode

Table of functions				
Display	**Press the button +.**	**Press the button –.**	**Press the button ○ for 3 - 5 seconds.**	**Press the button ○ briefly.**
SPEED/H display mode (service hours)	No function	No function	The display changes to the Setup menu of the speedometer functions.	next display mode
SPEED/CLK display mode (time)	No function	No function	The display changes to the Setup menu of the clock.	next display mode
SPEED/LAP display mode (lap time)	Starts or stops the clock.	Stops the current lap time and saves it, and the stop watch starts the next lap.	The stop watch and the lap time are reset.	next display mode
SPEED/ODO display mode (odometer)	No function	No function	–	next display mode
SPEED/TR1 display mode (trip master 1)	No function	No function	The **TR1**, **A1** and **S1** displays are reset to 0.0.	next display mode
SPEED/TR2 display mode (trip master 2)	Increases value **TR2**.	Decreases value **TR2**.	Clears value **TR2**.	next display mode
SPEED/A1 display mode (average speed 1)	No function	No function	The **TR1**, **A1** and **S1** displays are reset to 0.0.	next display mode
SPEED/A2 display mode (average speed 2)	No function	No function	–	next display mode
SPEED/S1 display mode (stop watch 1)	No function	No function	The **TR1**, **A1** and **S1** displays are reset to 0.0.	next display mode
SPEED/S2 display mode (stop watch 2)	Starts or stops **S2**.	No function	The **S2** and **A2** displays are reset to 0.0.	next display mode

Table of conditions and activability		
Display	**Vehicle at a standstill**	**Menu can be activated**
SPEED/H display mode (service hours)	•	
SPEED/CLK display mode (time)		•
SPEED/LAP display mode (lap time)		•
SPEED/TR1 display mode (trip master 1)		•
SPEED/TR2 display mode (trip master 2)		•
SPEED/A1 display mode (average speed 1)		•
SPEED/A2 display mode (average speed 2)		•
SPEED/S1 display mode (stop watch 1)		•
SPEED/S2 display mode (stop watch 2)		•

Fuel tap

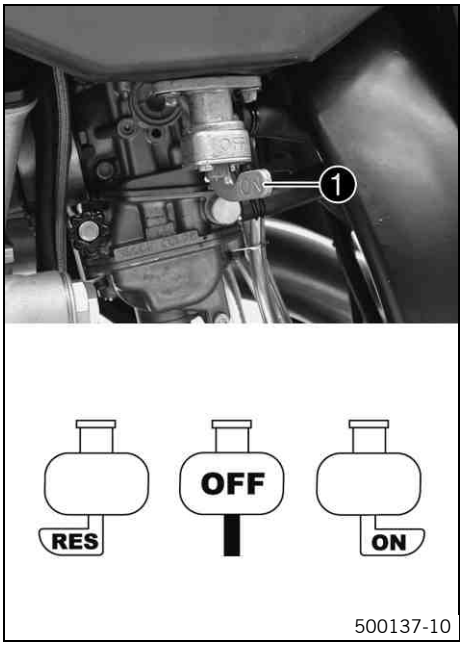

The fuel tap is on the left of the fuel tank.
With the tap handle ❶ on the fuel tap, you can open or close the supply of fuel to the carburetor.

Possible states

- Fuel supply closed **OFF** – No fuel can flow from the tank to the carburetor.
- Fuel supply open **ON** – Fuel can flow from the tank to the carburetor. The fuel tank empties down to the reserve.
- Reserve fuel supply open **RES** – Fuel can flow from the tank to the carburetor. The fuel tank empties completely.

Opening filler cap

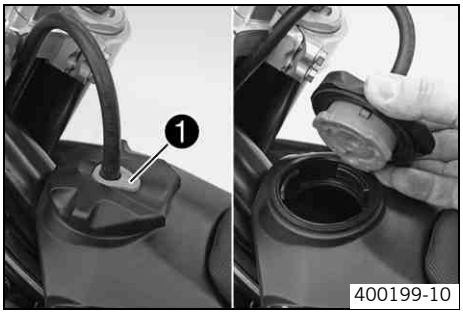

– Press release button ❶, turn filler cap counterclockwise and lift it free.

Closing filler cap

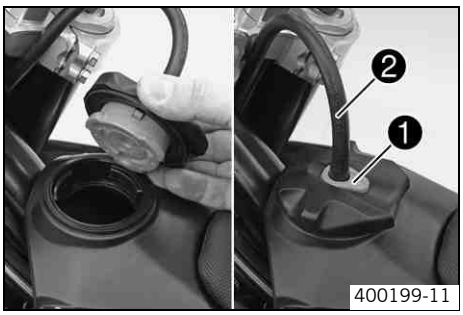

– Replace the filler cap and turn clockwise until the release button ❶ locks in place.

Info
Run the fuel tank breather hose ❷ without kinks.

Choke (EXC AUS, XC-W)

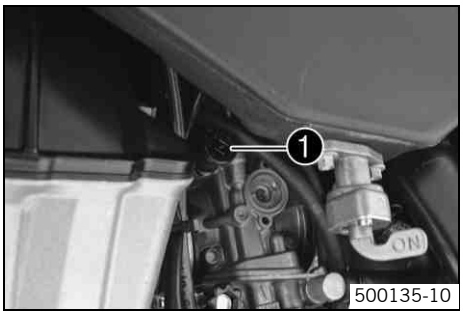

Choke ❶ is fitted on the left side of the carburetor.
Activating the choke function frees an opening through which the engine can draw extra fuel. This gives a richer fuel-air mixture, which is needed for a cold start.

Info
If the engine is warm, the choke function must be deactivated.

Possible states

- Choke function activated – The choke lever is pulled out to the stop.
- Choke function deactivated – The choke lever is pushed in to the stop.

Choke (EXC EU, EXC SIX DAYS)

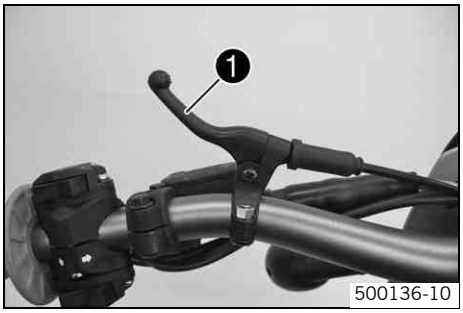

500136-10

The flasher switch ❶ is fitted on the left side of the handlebar.
Activating the choke function frees an opening through which the engine can draw extra fuel. This gives a richer fuel-air mixture, which is needed for a cold start.

Info
If the engine is warm, the choke function must be deactivated.

Possible states
- Choke function activated – The choke lever is pulled to the stop.
- Choke function deactivated – The choke lever is pushed back to the stop.

Shift lever

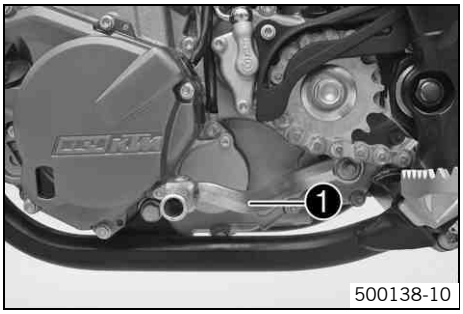

500138-10

Shift lever ❶ is mounted on the left side of the engine.

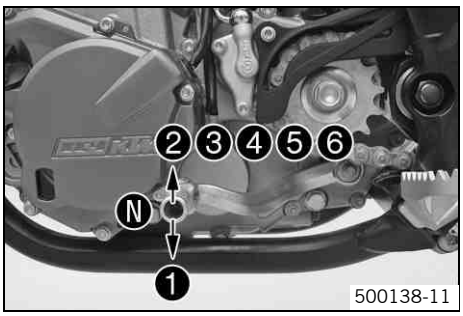

500138-11

The gear positions can be seen in the photograph.
The neutral or idle position is between the first and second gears.

Foot brake pedal

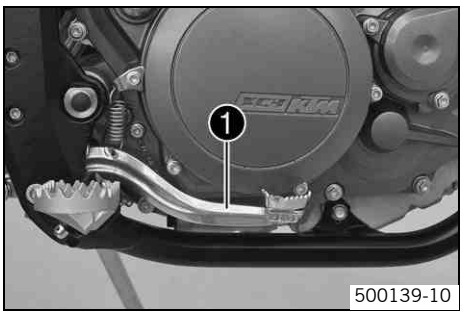

500139-10

Foot brake pedal ❶ is located in front of the right footrest.
The foot brake pedal is used to activate the rear brake.

Kickstarter

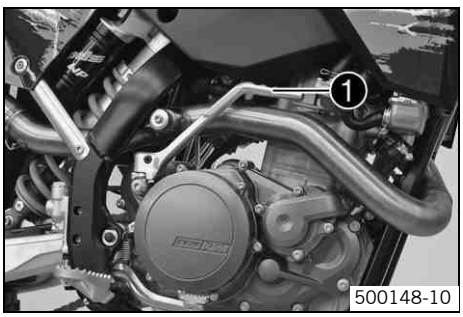

500148-10

Kickstarter ❶ is fitted on the right of the engine.
The engine can be started with either the kickstarter or the electric starter.
The upper part of the kickstarter can be swung out.

Info
Before riding, swing the upper part of the kickstarter inward toward the engine.

Side stand

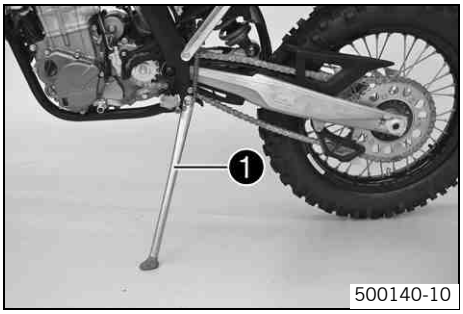

Note

Danger of damage Danger of damage by the vehicle running away or falling over.

– Always place the vehicle on a firm and even surface.

Note

Material damage Damage and destruction of components by excessive load.

– The side stand is designed for the weight of the motorcycle only. Do not sit on the motorcycle when it is supported by the side stand only. The side stand and/or the frame could be damaged and the motorcycle could fall over.

To park the motorcycle, press the side stand ❶ with your foot to the ground and lean the motorcycle on it.

When you are riding, the side stand ❶ must be folded up and secured with the rubber band ❷.

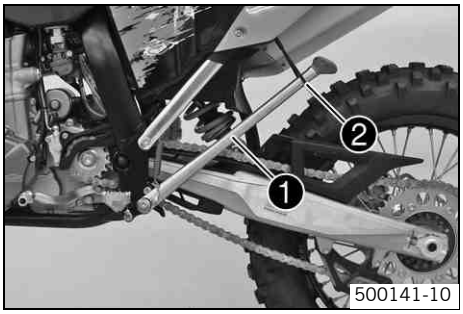

Steering lock (all EXC models)

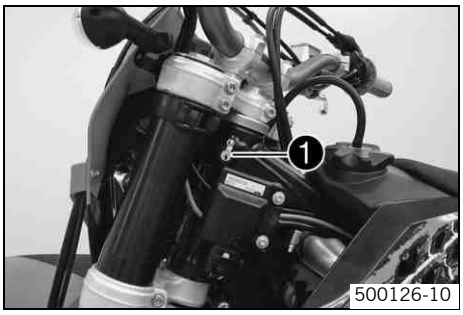

Steering lock ❶ is fitted on the left side of the steering head.
The steering lock is used to lock the steering. Steering, and therefore riding, is no longer possible.

Locking the steering (all EXC models)

Note

Danger of damage Danger of damage by the vehicle running away or falling over.

– Always place the vehicle on a firm and even surface.

– Park the motorcycle.
– Turn the handlebar as far as possible to the right.
– Insert the key in the steering lock, turn it to the left, press it in and turn it to the right. Remove the key.

✓ Steering is no longer possible.

Info

Never leave the key in the steering lock.

Unlocking the steering (all EXC models)

– Insert the key in the steering lock, turn it to the left, pull it out and turn it to the right. Remove the key.

✔ You can now steer the bike again.

Info
Never leave the key in the steering lock.

Advice on first use

Danger
Danger of accidents Danger from insufficient traffic competence.

– Do not use the vehicle if you are not fit to deal with traffic or if you have consumed alcohol and/or medicaments or drugs.

Warning
Risk of injury Risk of injury by missing/inadequate protective clothing.

– Wear protective clothing (helmet, boots, gloves, pants and jacket with protectors) every time you ride the vehicle. Always wear protective clothing, which must be in perfect condition and meet legal requirements.

Warning
Danger of crashing Impairment of riding behavior due to different tire tread patterns on front and rear wheels.

– The front and rear wheels must be fitted with tires with similar tread patterns to prevent loss of control over the vehicle.

Warning
Danger of accidents Critical riding behavior due to inappropriate riding.

– Adapt your riding speed to the road conditions and your riding ability.

Warning
Danger of accidents Accident risk caused by presence of a passenger.

– Your vehicle is not designed to carry passengers. Do not ride with a passenger.

Warning
Danger of accidents Brake system failure.

– If the foot brake pedal is not released, the brake linings drag permanently. The rear brake can fail due to overheating. Take your foot off the foot brake pedal if you do not want to brake.

Warning
Danger of accidents Unstable riding behavior.

– Do not exceed the maximum permitted weight and axle loads.

Warning
Risk of misappropriation Usage by unauthorized persons.

– Never leave the vehicle while the engine is running. Secure the vehicle against use by unauthorized persons.

Info
When using your motorcycle, remember that others may feel disturbed by excessive noise.

– Make sure that the pre-delivery inspection work has been carried out by an authorized KTM workshop.
  You receive a delivery certificate and the service record at vehicle handover.
– Before your first trip, read the entire operating instructions carefully.
– Get to know the controls.
– Adjust the basic position of clutch lever. (☛ p. 76)

(all XC-W models)
  – adjust the basic position of handbrake lever. (☛ p. 56)

(all EXC models)
  – Adjust the free travel of the handbrake lever. (☛ p. 57)
– Adjust the basic position of the footbrake lever. 🔧 (☛ p. 60)
– Get used to handling the motorcycle on a suitable piece of land before making a longer trip.

Info
Offroad, you should be accompanied by another person on another machine so that you can help each other.

– Try also to ride as slowly as possible and in a standing position to get a better feeling for the vehicle.
– Do not make any offroad trips that over-stress your ability and experience.
– Hold the handlebar firmly with both hands and keep your feet on the footrests when riding.

– If you carry any baggage, make sure it is fixed firmly as close as possible to the center of the vehicle and ensure even weight distribution between the front and rear wheels.

Info
Motorcycles react sensitively to any changes of weight distribution.

– Do not exceed the overall maximum permitted weight and the axle loads.

Guideline

Maximum permissible overall weight	335 kg (739 lb.)
Maximum permissible front axle load	145 kg (320 lb.)
Maximum permissible rear axle load	190 kg (419 lb.)

– Run the engine in.

Running in the engine

– During the running-in phase, do not exceed the specified engine speed and engine performance.

Guideline

Maximum engine speed	
During the first 3 service hours	7,000 rpm
Maximum engine performance during the running-in period	
During the first 3 service hours	≤ 50 %
During the next 12 service hours	≤ 75 %

– Avoid fully opening the throttle!

Checks before putting into operation

Info
Make sure that the motorcycle is in a perfect technical condition before use.

Info
In the interests of riding safety, make a habit of making a general check before you ride.

- Check the engine oil level. (☛ p. 79)
- Check the chain tension. (☛ p. 52)
- Check for chain dirt accumulation. (☛ p. 51)
- Check the tire condition. (☛ p. 66)
- Check the tire air pressure. (☛ p. 67)
- Check the front brake fluid level. (☛ p. 57)
- Check the rear brake fluid level. (☛ p. 61)
- Check the front brake linings. (☛ p. 58)
- Check the rear brake linings. (☛ p. 62)
- Check brake system function.
- Check the coolant level. (☛ p. 72)
- Check that all operating elements are correctly adjusted and free to move.
- Check the functioning of the electrical equipment.

Starting

Danger
Danger of poisoning Exhaust gases are poisonous and can result in unconsciousness and/or death.

- When running the engine, always make sure there is sufficient ventilation, and do not start or run the engine in a closed space.

Note
Engine failure High engine speeds in cold engines have a negative effect on the service life of the engine.

- Always warm up the engine at low engine speeds.

Info
If the motorcycle is unwilling to start, the cause can be old fuel in the float chamber. The flammable elements of the fuel evaporate after a long time of standing.
If the float chamber is filled with fresh fuel, the engine starts immediately.
Press the starter for a maximum of 5 seconds. Wait for a least 5 seconds until trying again.

Motorcycle has been out of use for more than 1 week

- Empty the carburetor float chamber. 🔧 (☛ p. 79)

- Turn handle ❶ of the fuel tap to the **ON** position. (Figure 500137-10☛ p. 20)

✓ Fuel can flow from the fuel tank to the carburetor.

- Remove the motorcycle from the stand.
- Shift gear to neutral.

(EXC AUS)

- Turn the emergency OFF switch to the position ❍.

Engine cold

(EXC AUS, XC-W)

- Pull the choke lever out as far as possible.

(EXC EU, EXC SIX DAYS)

- Pull the choke lever to the stop.

- Press the electric starter button or press the kickstarter robustly through its full range.

Info
Don't open the throttle.

Starting up

Info
If your bike has lights, switch them on before riding. You will then be seen earlier by other motorists.
When you are riding, the side stand must be folded up and secured with the rubber band.

– Pull the clutch lever, engage 1st gear, release the clutch lever slowly and simultaneously open the throttle carefully.

Shifting, riding

Warning
Danger of accidents If you change down at high engine speed, the rear wheel can lock up.

– Do not change into a low gear at high engine speed. The engine races and the rear wheel can block.

Info
If you hear unusual noises while riding, stop immediately, switch off the engine and contact an authorized KTM workshop.
First gear is used for starting off or for steep inclines.

– When conditions allow (incline, road situation, etc.), you can shift into a higher gear. To do so, release the throttle while simultaneously pulling the clutch lever, shift into the next gear, release the clutch and open the throttle.
– If the choke function was activated, deactivate it after the engine has warmed up.
– When you reach maximum speed after fully opening the throttle, turn back the throttle to about ¾ of its range; the speed hardly drops, but the fuel consumption falls considerably.
– Always open the throttle only as much as the engine can handle – abrupt throttle opening increases fuel consumption.
– To shift down, brake and close the throttle at the same time.
– Pull the clutch lever and shift into a lower gear, release the clutch lever slowly and open the throttle or shift again.
– Switch off the engine if you expect to be standing for a long time.
  Guideline

≥ 2 min

– Avoid frequent and longer slipping of the clutch. This heats the engine oil, the engine and the cooling system.
– Ride with a lower engine speed instead of with a high engine speed and a slipping clutch.

Braking

Warning
Danger of accidents If you brake too hard, the wheels can lock.

– Adapt your braking to the traffic situation and the road conditions.

Warning
Danger of accidents Reduced braking caused by spongy pressure point of front or rear brake.

– Have the brake system checked in an authorized KTM workshop, and do not ride any further.

Warning
Danger of accidents Reduced braking due to wet or dirty brakes.

– Clean or dry dirty or wet brakes by riding and braking gently.

– On sandy, wet or slippery surfaces, use the rear brake.
– Braking should always be completed before you go into a bend. Change down to a lower gear appropriate to your road speed.
– On long downhill stretches, use the braking effect of the engine. Change down one or two gears, but do not overstress the engine. In this way, you have to brake far less and the brakes do not overheat.

Stopping, parking

Warning
Risk of misappropriation Usage by unauthorized persons.

– Never leave the vehicle while the engine is running. Secure the vehicle against use by unauthorized persons.

Warning
Danger of burns Some vehicle components get very hot when the machine is driven.

– Do not touch hot components such as exhaust system, radiator, engine, shock absorber and brakes. Allow these components to cool down before starting work on them.

Note
Danger of damage Danger of damage by the vehicle running away or falling over.

– Always place the vehicle on a firm and even surface.

Note
Fire hazard Some components (engine, radiator and exhaust system) get very hot when the engine is running.

– Do not place the vehicle where there are flammable or explosive substances.

Note
Material damage Damage and destruction of components by excessive load.

– The side stand is designed for the weight of the motorcycle only. Do not sit on the motorcycle when it is supported by the side stand only. The side stand and/or the frame could be damaged and the motorcycle could fall over.

– Brake the motorcycle.
– Shift gear to neutral.

(all XC-W models)
– Press and hold the short circuit button ⊗ while the engine is idling until the engine stops.

(all EXC models)
– Press and hold the short circuit button ⊗ while the engine is idling until the engine stops.

– Turn handle ❶ of the fuel tap to the **OFF** position. (Figure 500137-10 ☛ p. 20)
– Park the motorcycle on firm ground.

Refueling

Danger
Fire hazard Fuel can easily catch fire.

– Never fill up the vehicle near open flames or burning cigarettes, and always switch off the engine first. Be careful that no fuel is spilt, especially on hot vehicle components. Clean up spilt fuel immediately.
– Fuel in the fuel tank expands when warm and can escape if the tank is overfilled. See specifications on filling up with fuel.

Warning
Danger of poisoning Fuel is poisonous and a health hazard.

– Avoid contact between fuel and skin, eyes and clothing. Do not inhale fuel vapors. If fuel gets into your eyes, rinse immediately with water and contact a doctor. Wash affected skin areas immediately with soap and water. If fuel is swallowed, contact a doctor immediately. Change clothing that has come into contact with fuel.

Warning
Environmental hazard Improper handling of fuel is a danger to the environment.

– Do not allow fuel to get into the ground water, the ground, or the sewage system.

– Switch off the engine.
– Open the filler cap. (☛ p. 20)

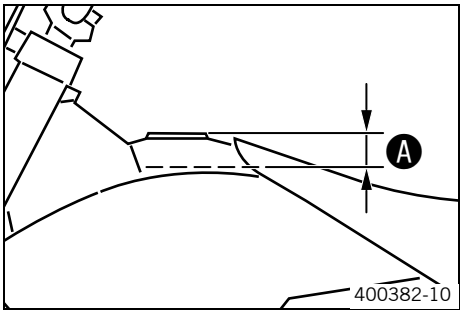

– Fill the fuel tank with fuel up to measurement ❒.

Guideline

Measurement of ❒	35 mm (1.38 in)

Total fuel tank capacity, approx. (EXC, EXC SIX DAYS, XC-W ZA)	9.0 l (2.38 US gal)	Super unleaded (ROZ 95 / RON 95 / PON 91) (☛ p. 106)
Total fuel tank capacity, approx. (XC-W USA)	9.2 l (2.43 US gal)	Super unleaded (ROZ 95 / RON 95 / PON 91) (☛ p. 106)

– Close the filler cap. (☛ p. 20)

Important maintenance work to be carried out by an authorized KTM workshop.

		S3N	S15A	S30A
Engine	Change the engine oil and oil filter and clean the engine oil screen. 🔧 (☛ p. 80)	•	•	•
	Change the gear oil and clean the gear oil screen. 🔧 (☛ p. 82)	•	•	•
	Replace spark plug.			•
	Check the valve clearance. 🔧	•	•	•
	Check engine mounting screws for tightness.	•	•	•
	Clean spark plug connectors and check for tightness.	•	•	•
	Check that the screws in the shift lever and the kickstarter are tight.	•	•	•
Carburetor	Check carburetor connection boots for cracks and leakage.		•	•
	Check vent hoses for damage and routing without sharp bends.	•	•	•
	Check idle.	•	•	•
Attachments	Check the cooling system for leakage.	•	•	•
	Check the antifreeze and coolant level. (☛ p. 72)	•	•	•
	Check the exhaust system for leakage and looseness.		•	•
	Check Bowden cables for damage, smooth operation and routing without sharp bends.	•	•	•
	Check the fluid level of the hydraulic clutch. (☛ p. 76)	•	•	•
	Clean the air filter. 🔧 (☛ p. 75)	•	•	•
	Check cables for damage and routing without sharp bends.		•	•
	Check that the electrical equipment is functioning properly.	•	•	•
	Check the headlamp setting.		•	•
Brakes	Check the front brake linings. (☛ p. 58)	•	•	•
	Check the rear brake linings. (☛ p. 62)	•	•	•
	Check the brake discs. (☛ p. 55)	•	•	•
	Check the front brake fluid level. (☛ p. 57)	•	•	•
	Check the rear brake fluid level. (☛ p. 61)	•	•	•
	Check brake lines for damage and leakage.	•	•	•
	Check the free travel of the hand brake lever. (☛ p. 56)	•	•	•
	Check the free travel of the foot brake lever. (☛ p. 60)	•	•	•
	Check brake system function.	•	•	•
	Check screws and guide bolts of brake system for tightness.	•	•	•
Chassis	Check shock absorber and fork for leakage and functioning. 🔧	•	•	•
	Clean dust boots of fork legs. (☛ p. 39)		•	•
	Bleed fork legs. (☛ p. 39)		•	•
	Check the swingarm bearing. 🔧		•	•
	Check play of steering head bearing. (☛ p. 40)	•	•	•
	Check all screws to see if they are tight.	•	•	•
Wheels	Check the spoke tension. (☛ p. 67)	•	•	•
	Check rim run-out.	•	•	•
	Check the tire condition. (☛ p. 66)	•	•	•
	Check the tire air pressure. (☛ p. 67)	•	•	•
	Check the chain wear. (☛ p. 53)	•	•	•
	Check the chain tension. (☛ p. 52)	•	•	•
	Clean the chain. (☛ p. 51)	•	•	•
	Check the wheel bearing for play. 🔧	•	•	•
	Clean and grease adjusting screws of chain adjuster.	•	•	•

S3N: After 3 service hours
S15A: Every 15 service hours / after every race
S30A: Every 30 service hours

Important maintenance work to be carried out by an authorized KTM workshop. (as additional order)

	Competition use			Hobby use			J1A	J2A
	S15A	S30A	S45A	S30A	S60A	S90A		
Carry out a complete fork service.							•	•
Carry out a complete shock absorber service.								•
Grease the steering head bearing. (☛ p. 46)							•	•
Treat electric contacts with contact spray.							•	•
Change the hydraulic clutch fluid. (☛ p. 76)							•	•
Change the front brake fluid.							•	•
Change the rear brake fluid.							•	•
Clean the spark arrestor. (XC-W USA)							•	•
Check wear of clutch discs.	•	•	•	•	•	•		
Check the clutch.		•			•			
Check/measure the cylinder.			•			•		
Change the piston.			•			•		
Check the camshaft.			•			•		
Change the camshaft bearing.			•			•		
Check the valve spring seat.			•			•		
Check the cylinder head.			•			•		
Check the valves.			•			•		
Check the valve springs.			•			•		
Check the radial clearance of the rocker arm rollers.			•			•		
Check the timing-chain tensioner function.			•			•		
Check the balancer shaft.			•			•		
Check the crankshaft run-out at the bearing pin.			•			•		
Change the conrod bearing.			•			•		
Change the crankshaft main bearing.			•			•		
Check the transmission.			•			•		
Check the shift mechanism.			•			•		
Check the spring length of the oil pressure regulator valve.			•			•		
Change glass fiber yarn filling of main silencer.		•			•			
Replace foot brake cylinder seals.		•			•			
Check/adjust the carburetor components.		•			•		•	•

S15A: Every 15 service hours / after every race
S30A: Every 30 service hours
S45A: Every 45 service hours
S60A: Every 60 service hours
S90A: Every 90 service hours
J1A: annually
J2A: every 2 years

Important checks and maintenance work to be carried out by the rider.

	NB1A
Check the engine oil level. (☛ p. 79)	•
Check the front brake fluid level. (☛ p. 57)	•
Check the rear brake fluid level. (☛ p. 61)	•
Check the front brake linings. (☛ p. 58)	•
Check the rear brake linings. (☛ p. 62)	•
Check and adjust Bowden cables.	•
Bleed fork legs. (☛ p. 39)	•
Clean dust boots of fork legs. (☛ p. 39)	•

	NB1A
Clean the chain. (☛ p. 51)	•
Check the chain tension. (☛ p. 52)	•
Check the chain wear. (☛ p. 53)	•
Check the rear sprocket / engine sprocket for wear. (☛ p. 52)	•
Clean the air filter. 🔧 (☛ p. 75)	•
Check the tire air pressure. (☛ p. 67)	•
Check the tire condition. (☛ p. 66)	•
Check the coolant level. (☛ p. 72)	•
Empty the carburetor float chamber. 🔧 (☛ p. 79)	•
Check that all operating elements for smooth operation.	•
Check braking.	•
Check all screws, nuts and hose clamps regularly for tightness.	•

NB1A: Depending on conditions of use according to requirements.

Jacking up the motorcycle

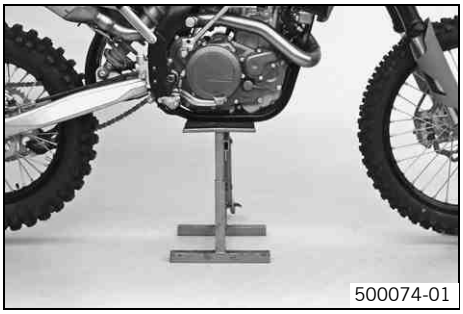

Note

Danger of damage Danger of damage by the vehicle running away or falling over.

– Always place the vehicle on a firm and even surface.

– Jack up the motorcycle underneath the engine. The wheels must no longer touch the ground.

Work stand (54829055000)

– Secure the motorcycle against falling over.

Removing the motorcycle from the work stand

Note

Danger of damage Danger of damage by the vehicle running away or falling over.

– Always place the vehicle on a firm and even surface.

– Remove the motorcycle from the work stand.
– Remove the work stand.

Checking the basic chassis setting with the rider's weight

Info

When adjusting the basic chassis setting, first adjust the shock absorber and then the fork.

– For optimal motorcycle riding characteristics and to avoid damage to forks, shock absorbers, swing arm and frame, the basic settings of the suspension components must match your body weight.
– As delivered, KTM offroad motorcycles are adjusted for a standard rider weight (with full protective clothing).

Guideline

Standard rider weight	75… 85 kg (165… 187 lb.)

– If your weight is above or below the standard range, you have to adjust the basic setting of the suspension components accordingly.
– Small weight differences can be compensated by adjusting the spring preload, but in the case of large weight differences, the springs must be replaced.

Compression damping of shock absorber

The shock absorber can regulate compression damping separately in the low-speed and high-speed ranges (Dual Compression Control). The term low and high speed refers to the movement of the shock absorber during compression and not the riding speed of the motorcycle.
The low-speed and high-speed technology works non-specifically.

Adjusting high-speed compression damping of the shock absorber

Danger

Danger of accidents The shock absorber is under high pressure.

– The shock absorber is filled with highly compressed nitrogen, so never dismantle the shock absorber or carry out any maintenance on it yourself.

Info

The high-speed setting can be seen during the fast compression of the shock absorber.

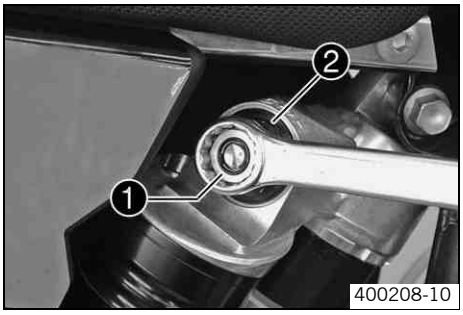

– Turn the adjusting screw ❶ clockwise with a ring wrench until it stops.

Info
Do not loosen nut ❷!

– Turn back counterclockwise the number of turns corresponding to the shock absorber type.

Guideline

Compression damping, high-speed	
Comfort	2 turns
Standard	1.5 turns
Sport	1 turn

Info
Turn clockwise to increase damping, turn counterclockwise to reduce suspension damping.

Adjusting the low-speed compression damping of the shock absorber

Danger
Danger of accidents The shock absorber is under high pressure.

– The shock absorber is filled with highly compressed nitrogen, so never dismantle the shock absorber or carry out any maintenance on it yourself.

Info
The low-speed setting can be seen during the slow to normal compression of the shock absorber.

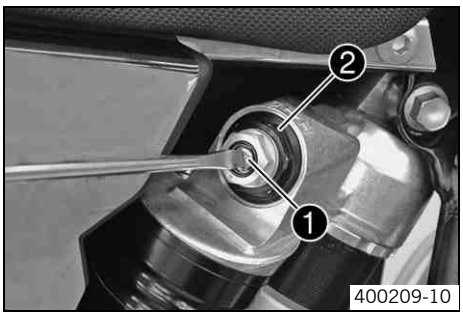

– Turn the adjusting screw ❶ clockwise with a screwdriver until it stops.

Info
Do not loosen nut ❷!

– Turn back counterclockwise the number of clicks corresponding to the shock absorber type.

Guideline

Compression damping, low-speed	
Comfort	18 clicks
Standard	15 clicks
Sport	12 clicks

Info
Turn clockwise to increase damping, turn counterclockwise to reduce suspension damping.

Adjusting rebound damping of the shock absorber

Danger
Danger of accidents The shock absorber is under high pressure.

– The shock absorber is filled with highly compressed nitrogen, so never dismantle the shock absorber or carry out any maintenance on it yourself.

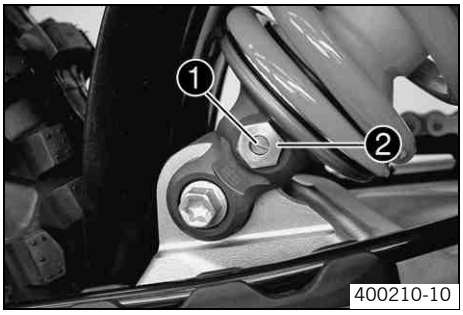

– Turn the adjusting screw ❶ clockwise until it stops.

Info
Do not loosen nut ❷!

– Turn back counterclockwise the number of clicks corresponding to the shock absorber type.

Guideline

Rebound damping	
Comfort	26 clicks
Standard	24 clicks
Sport	22 clicks

Info
Turn clockwise to increase damping, turn counterclockwise to reduce suspension damping.

Measuring rear wheel sag unloaded

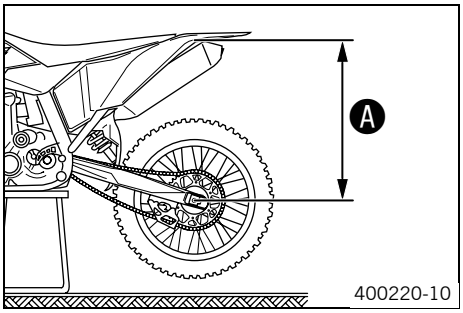

– Jack up the motorcycle. (☛ p. 33)
– Measure the distance – as vertical as possible – between the rear axle and a fixed point, for example, a mark on the side cover.
– Make a note of the value as measurement ❍.
– Remove the motorcycle from the work stand. (☛ p. 33)

Checking static sag of the shock absorber

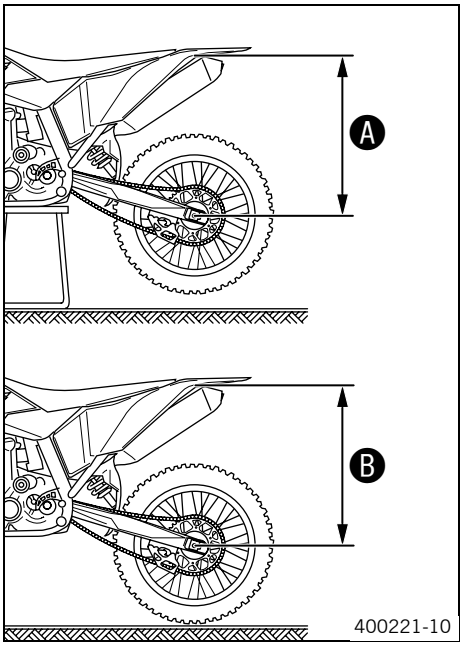

– Measure distance ❍ of rear wheel unloaded. (☛ p. 35)
– Ask someone to help you by holding the motorcycle upright.
– Measure the distance between the rear axle and the fixed point again.
– Make a note of the value as measurement ❍.

Info
The static sag is the difference between measurements ❍ and ❍.

– Check the static sag.

Static sag	35 mm (1.38 in)

» If the static sag is less or more than the specified value:
  – Adjust the spring preload of the shock absorber. 🔧 (☛ p. 36)

Checking the riding sag of the shock absorber

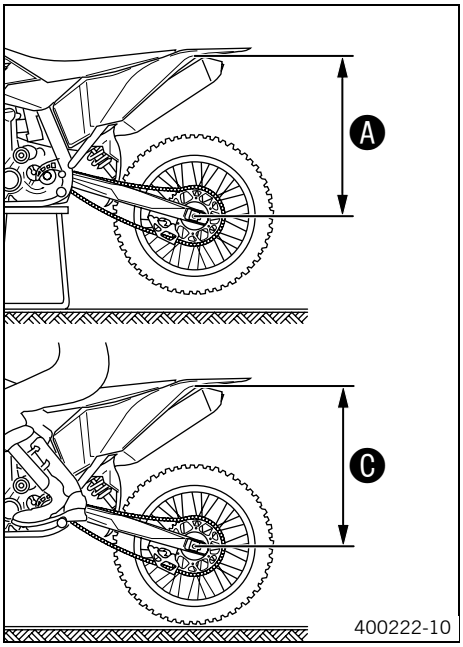

– Measure distance ❹ of rear wheel unloaded. (☛ p. 35)
– With another person holding the motorcycle, sit on the saddle with full protective clothing in a normal sitting position (feet on footrests) and bounce up and down a few times until the rear suspension levels out.
– The other person now has to measure the distance between the rear axle and a fixed point.
– Make a note of the value as measurement ❸.

Info
The riding sag is the difference between measurements ❹ and ❸.

– Check the riding sag.

Riding sag	105 mm (4.13 in)

» If the riding sag differs from the specified measurement:
  – Adjust the riding sag. 🔧 (☛ p. 37)

Adjusting spring preload of the shock absorber 🔧

Danger
Danger of accidents The shock absorber is under high pressure.

– The shock absorber is filled with highly compressed nitrogen, so never dismantle the shock absorber or carry out any maintenance on it yourself.

Info
Before changing the spring preload, make a note of the present setting, e.g., by measuring the length of the spring.

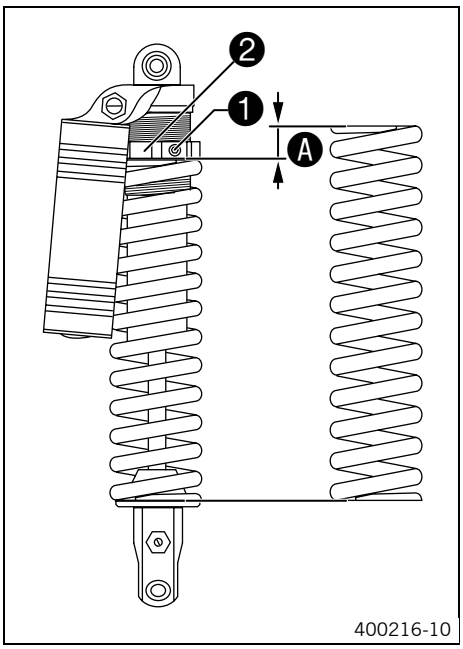

– Remove shock absorber. 🔧 (☛ p. 37)
– After removing the shock absorber, clean it thoroughly.
– Loosen screw ❶.
– Turn adjusting ring ❷ until the spring is no longer under tension.

Combination wrench (50329080000)
Hook wrench (T106S)

– Measure the overall spring length when not under tension.
– Tighten the spring by turning adjusting ring ❷ to measurement ❹.
Guideline

Spring preload	9 mm (0.35 in)

Info
Depending on the static sag and/or the riding sag, it may be necessary to increase or decrease the spring preload.

– Tighten screw ❶.
Guideline

Screw, shock absorber adjusting ring	M6	5 Nm (3.7 lbf ft)

– Install the shock absorber. 🔧 (☛ p. 37)

Adjusting riding sag

- Remove shock absorber. (☛ p. 37)
- After removing the shock absorber, clean it thoroughly.
- Choose and mount a suitable spring.

  Guideline

Spring rate	
Weight of rider: 65… 75 kg (143… 165 lb.)	69 N/mm (394 lb/in)
Weight of rider: 75… 85 kg (165… 187 lb.)	72 N/mm (411 lb/in)
Weight of rider: 85… 95 kg (187… 209 lb.)	76 N/mm (434 lb/in)

Info
The spring rate is shown on the outside of the spring.
Smaller weight differences can be compensated by changing the spring preload.

- Install the shock absorber. (☛ p. 37)
- Check the static sag of the shock absorber. (☛ p. 35)
- Check the riding sag of the shock absorber. (☛ p. 36)
- Adjust the rebound damping of the shock absorber. (☛ p. 34)

Removing the shock absorber

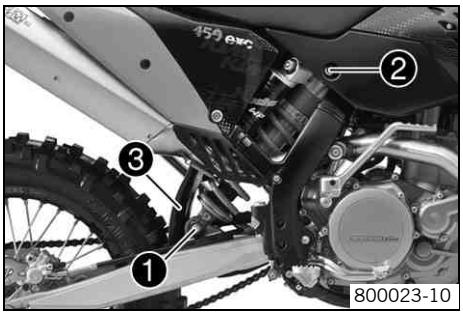

800023-10

- Jack up the motorcycle. (☛ p. 33)
- Remove screw ❶ and lower the rear wheel with the swing arm as far as possible without blocking the rear wheel. Fix the rear wheel in this position.
- Remove screw ❷, push splash protector ❸ to the side, and remove the shock absorber.

Installing the shock absorber

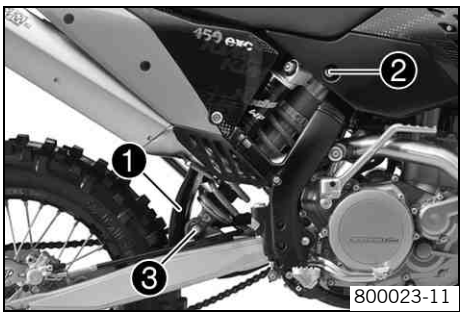

800023-11

- Push splash protector ❶ to the side and position the shock absorber. Mount and tighten screw ❷.

  Guideline

Screw, top shock absorber	M12	80 Nm (59 lbf ft)	**Loctite® 243™**

- Mount and tighten screw ❸.

  Guideline

Screw, bottom shock absorber	M12	80 Nm (59 lbf ft)	**Loctite® 243™**

Info
The heim joint for the shock absorber at the swing arm is Teflon coated. It must not be greased with grease or with other lubricants. Lubricants dissolve the Teflon coating, thereby drastically reducing the service life.

- Remove the motorcycle from the work stand. (☛ p. 33)

Checking basic setting of fork

Info
For various reasons, no exact riding sag can be determined for the forks.

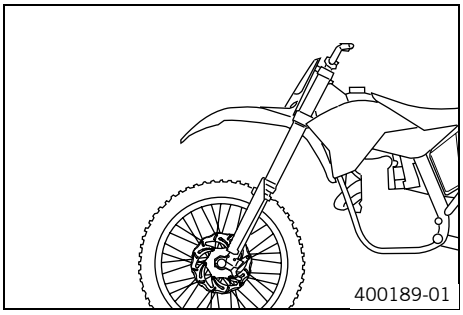

- As with the shock absorber, smaller weight differences can be compensated by the spring preload.
- However, if your fork is often overloaded (hard end stop on compression), you must fit harder springs to avoid damage to the fork and frame.

Adjusting compression damping of fork

Info
The hydraulic compression damping determines the fork suspension behavior.

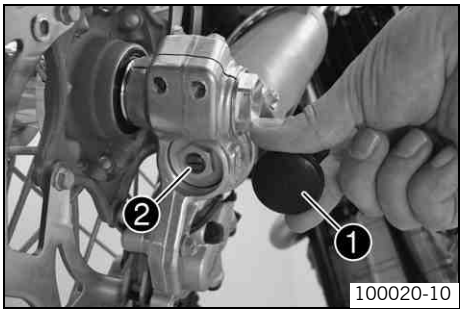

- Remove protection covers ❶.
- Turn adjusting screws ❷ clockwise until they stop.

Info
The adjusting screws ❷ are located at the bottom end of the fork legs.
Make the same adjustment on both fork legs.

- Turn back counterclockwise the number of clicks corresponding to the fork type.

Guideline

Compression damping	
Comfort	26 clicks
Standard	22 clicks
Sport	20 clicks

Info
Turn clockwise to increase damping, turn counterclockwise to reduce suspension damping.

- Mount protection covers ❶.

Adjusting rebound damping of fork

Info
The hydraulic rebound damping determines the fork suspension behavior.

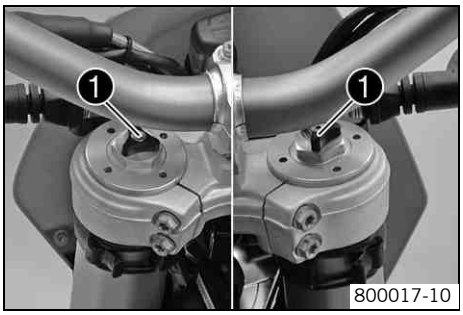

- Turn adjusting screws ❶ clockwise until they stop.

Info
The adjusting screws ❶ are located at the top end of the fork legs.
Make the same adjustment on both fork legs.

– Turn back counterclockwise the number of clicks corresponding to the fork type.

Guideline

Rebound damping	
Comfort	24 clicks
Standard	22 clicks
Sport	22 clicks

Info
Turn clockwise to increase damping, turn counterclockwise to reduce suspension damping.

Adjusting spring preload of the fork

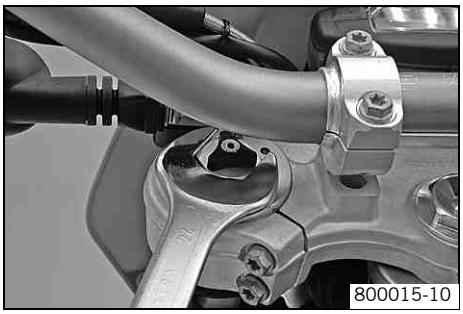
800015-10

– Turn adjusting screws counterclockwise until they stop.

Info
Make the same adjustment on both fork legs.

– Turn back clockwise the number of turns corresponding to the fork type.

Guideline

Spring preload - **Preload Adjuster**	
Comfort	2 turns
Standard	2 turns
Sport	4 turns

Info
Turn clockwise to increase spring preload, turn counterclockwise to reduce spring preload.
Adjusting the spring preload has no influence on the absorption setting of the rebound damping.
Basically, however, you should set the rebound damping higher with a higher spring preload.

Bleeding fork legs

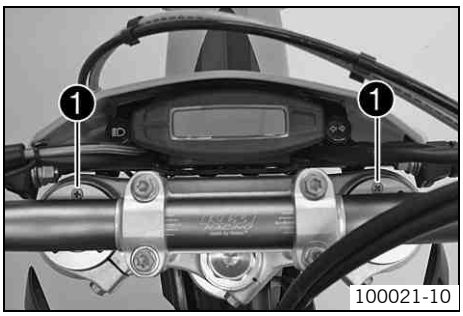

100021-10

– Jack up the motorcycle. (☛ p. 33)
– Remove bleeder screws ❶ briefly.
✓ Any excess pressure escapes from the interior of the fork.
– Mount and tighten bleeder screws.
– Remove the motorcycle from the work stand. (☛ p. 33)

Cleaning dust boots of fork legs

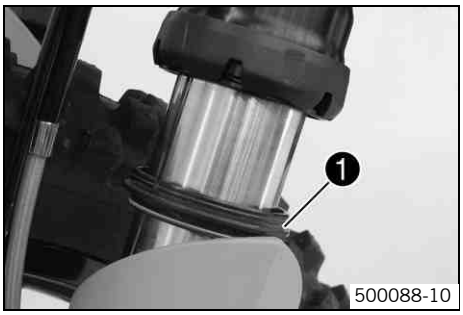

500088-10

– Jack up the motorcycle. (☛ p. 33)
– Loosen the fork protection. (☛ p. 40)
– Push dust boots ❶ of both fork legs downwards.

Info
The dust boots should remove dust and coarse dirt particles from the fork tubes. Over time, dirt can penetrate behind the dust boots. If this dirt is not removed, the oil seals behind can start to leak.

Warning

Danger of accidents Reduced braking due to oil or grease on the brake discs.

– Always keep the brake discs free of oil and grease, and clean them with brake cleaner when necessary.

– Clean and oil the dust boots and inner fork tube of both fork legs.

Universal oil spray (☛ p. 108)

– Press the dust boots back into their normal position.
– Remove excess oil.
– Position the fork protection. (☛ p. 40)
– Remove the motorcycle from the work stand. (☛ p. 33)

Loosening the fork protection

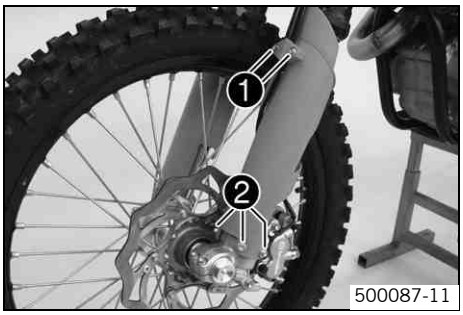

– Remove screws ❶ and take off clamp.
– Remove screws ❷ on left fork leg. Push the fork protection downwards.
– Remove the screws on the right fork leg. Push the fork protection downwards.

Positioning the fork protection

– Position the fork protection on the left fork leg. Mount and tighten screws ❶.

Guideline

Remaining screws, chassis	M6	10 Nm (7.4 lbf ft)

– Position the brake line and cable harness. Put the clamp on, mount and tighten screws ❷.
– Position the fork protection on the right fork leg. Mount and tighten screws.

Guideline

Remaining screws, chassis	M6	10 Nm (7.4 lbf ft)

Checking play of steering head bearing

Warning

Danger of accidents Unsafe riding behavior due to incorrect steering head bearing play.

– The steering head bearing play should be adjusted immediately in an authorized KTM workshop.

Info

If the bike is driven for a longer time with play in the steering head bearing, the bearing and the bearing seats in the frame can be damaged after time.

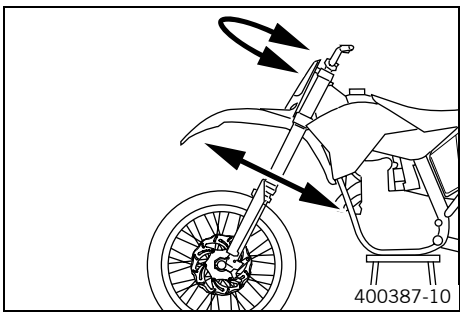

– Jack up the motorcycle. (☛ p. 33)
– Move the handlebar to the straight-ahead position. Move the fork legs to and fro in the direction of travel.

No play should be noticeable in the steering head bearing.

» If there is noticeable play present:

(EXC SIX DAYS, XC-W USA)

– Adjust play of the steering head bearing. 🔧 (☛ p. 41)

(EXC EU, EXC AUS, XC-W ZA)

– Adjust play of the steering head bearing. 🔧 (☛ p. 41)

– Move the handlebar to and fro over the entire steering range.

The handlebar must be able to move easily over the entire steering range. No resting locations should be noticeable.

» If click positions are noticeable:

(EXC SIX DAYS, XC-W USA)

– Adjust play of the steering head bearing. 🔧 (☛ p. 41)

(EXC EU, EXC AUS, XC-W ZA)

– Adjust play of the steering head bearing. 🔧 (☛ p. 41)

– Check the steering head bearing and replace if required.

– Remove the motorcycle from the work stand. (☛ p. 33)

Adjusting play of steering head bearing 🔧 (EXC EU, EXC AUS, XC-W ZA)

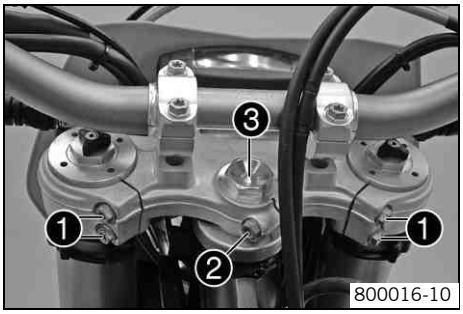

– Jack up the motorcycle. (☛ p. 33)

– Loosen screws ❶ and ❷.

– Loosen and retighten screw ❸.

Guideline

Screw, top steering head	M20x1.5	10 Nm (7.4 lbf ft)

– Using a plastic hammer, tap lightly on the upper triple clamp to avoid strains.

– Fully tighten screw ❶.

Guideline

Screw, top triple clamp	M8	20 Nm (14.8 lbf ft)

– Tighten screw ❷.

Guideline

Screw, top steering stem	M8	20 Nm (14.8 lbf ft)

– Check play of steering head bearing. (☛ p. 40)

Adjusting play of steering head bearing 🔧 (EXC SIX DAYS, XC-W USA)

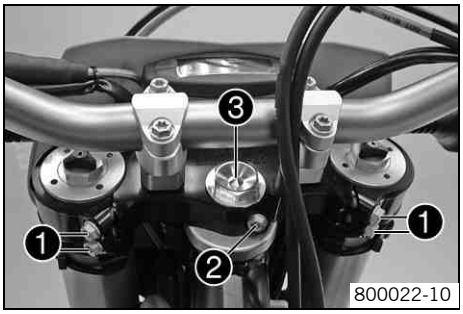

– Jack up the motorcycle. (☛ p. 33)

– Loosen screw ❶. Remove screw ❷.

– Loosen and retighten screw ❸.

Guideline

Screw, top steering head	M20x1.5	10 Nm (7.4 lbf ft)

– Using a plastic hammer, tap lightly on the upper triple clamp to avoid strains.

– Fully tighten screw ❶.

Guideline

Screw, top triple clamp	M8	17 Nm (12.5 lbf ft)

– Mount and tighten screw ❷.

Guideline

Screw, top steering stem	M8	17 Nm (12.5 lbf ft)	**Loctite® 243™**

– Check play of steering head bearing. (☛ p. 40)

Removing the fork legs

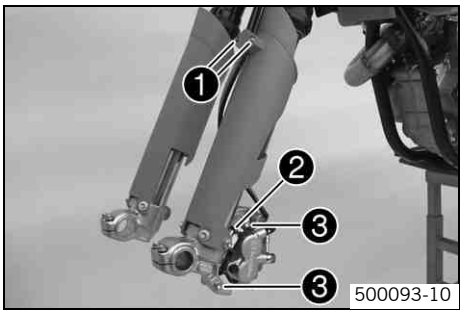

500093-10

- Remove the front wheel. 🔧 (☛ p. 64)
- Remove screws ❶ and take off clamp.
- Remove cable clip ❷, remove screw ❸ and take off the brake caliper.
- Hang the brake caliper and the brake line loosely to the side.

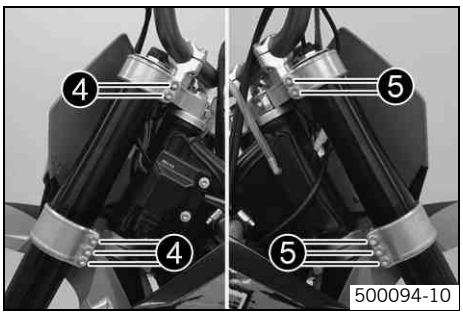

500094-10

(EXC SIX DAYS, XC-W USA)

- Loosen screw ❹. Remove the fork leg on the left.
- Loosen screw ❺. Remove the fork leg on the right.

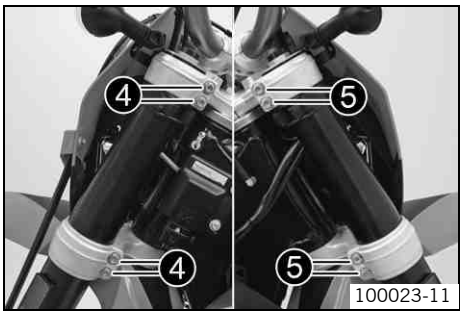

100023-11

(EXC EU, EXC AUS, XC-W ZA)

- Loosen screw ❹. Remove the fork leg on the left.
- Loosen screw ❺. Remove the fork leg on the right.

Installing the fork legs 🔧

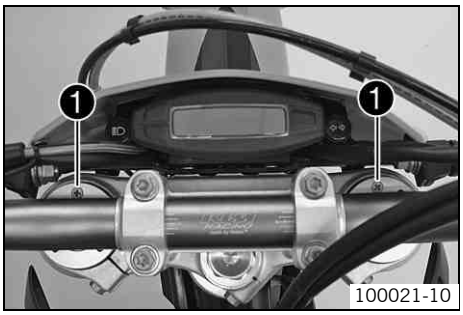

100021-10

- Position the fork legs.

> **Info**
> The topmost sunk nut in the fork leg must be flush to the upper edge of the upper triple clamp.
> Position the bleeder screw ❶ to the front.

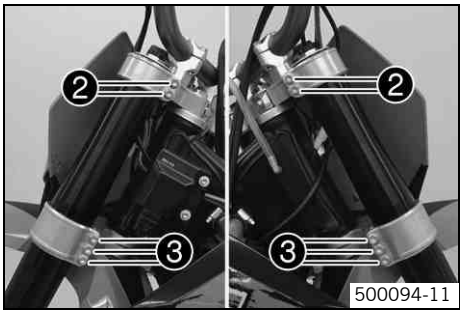

500094-11

(EXC SIX DAYS, XC-W USA)

- Fully tighten screw ❷.

  Guideline

Screw, top triple clamp	M8	17 Nm (12.5 lbf ft)

- Fully tighten screw ❸.

  Guideline

Screw, bottom triple clamp	M8	12 Nm (8.9 lbf ft)

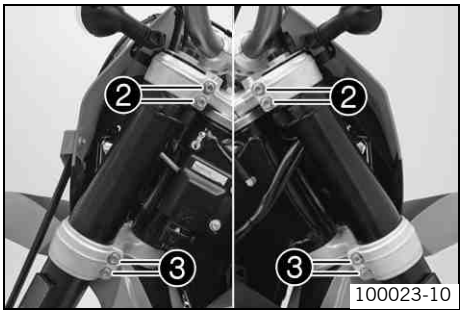

(EXC EU, EXC AUS, XC-W ZA)

– Fully tighten screw ❷.

Guideline

Screw, top triple clamp	M8	20 Nm (14.8 lbf ft)

– Fully tighten screw ❸.

Guideline

Screw, bottom triple clamp	M8	15 Nm (11.1 lbf ft)

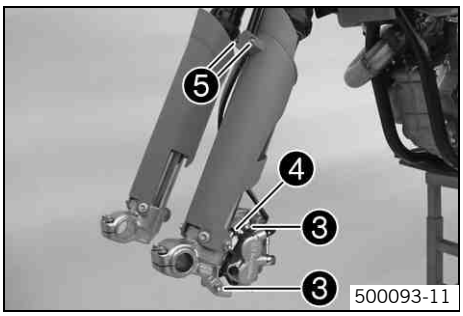

– Position brake caliper, mount and tighten screws ❸.

Guideline

Screw, front brake caliper	M8	25 Nm (18.4 lbf ft)	**Loctite® 243™**

– Mount cable clip ❹.
– Position the brake line and cable harness. Put the clamp on, mount and tighten screws ❺.
– Install the front wheel. 🔧 (☛ p. 64)

Removing the fork protector 🔧

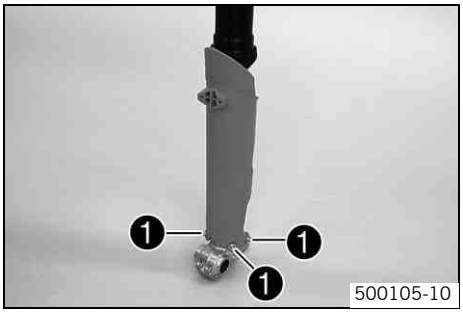

– Remove the fork legs. (☛ p. 42)
– Remove screws ❶ on the left fork leg. Remove the fork protector upwards.
– Remove the screws on the right fork leg. Remove the fork protector upwards.

Installing the fork protector 🔧

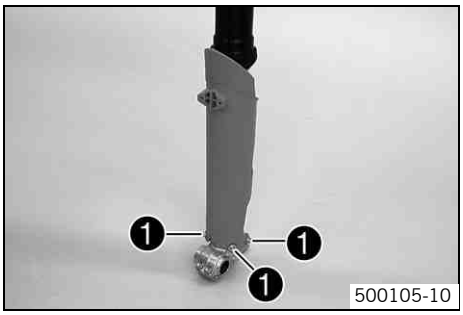

– Position the fork protection on the left fork leg. Mount and tighten screws ❶.

Guideline

Remaining screws, chassis	M6	10 Nm (7.4 lbf ft)

– Position the fork protection on the right fork leg. Mount and tighten the screws.

Guideline

Remaining screws, chassis	M6	10 Nm (7.4 lbf ft)

– Install the fork legs. 🔧 (☛ p. 42)

Removing the lower triple clamp 🔧 (EXC SIX DAYS, XC-W USA)

– Remove the fork legs. (☛ p. 42)

(XC-W USA)

– Dismount the start number plate. (☛ p. 48)

(EXC SIX DAYS)

– Remove the headlight mask with the headlight. (☛ p. 47)

– Dismount the front fender. (☛ p. 47)

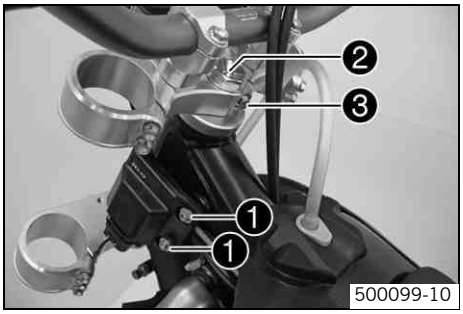

– Remove screws ❶ and hang the CDI control unit to the side.

Info
Do not unplug the CDI control unit.

– Remove screw ❷. Remove screw ❸, take off top triple clamp with the handlebar and place it on one side.

Info
Protect the motorcycle and its attachments from damage by covering them. Do not bend the cables and lines.

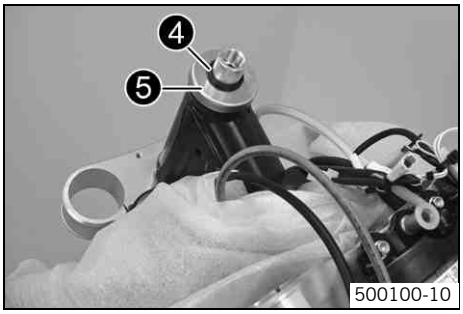

– Remove o-ring ❹. Remove protector ring ❺.
– Remove the lower triple clamp with the steering stem.
– Remove the upper steering head bearing.

Removing the lower triple clamp 🔧 (EXC EU, EXC AUS, XC-W ZA)

– Remove the fork legs. (☛ p. 42)
– Remove the headlight mask with the headlight. (☛ p. 47)
– Dismount the front fender. (☛ p. 47)

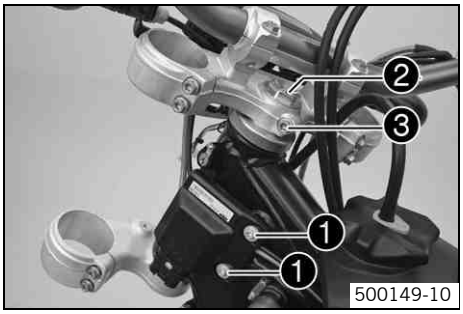

– Remove screws ❶ and hang the CDI control unit to the side.

Info
Do not unplug the CDI control unit.

– Remove screw ❷. Loosen screw ❸. Take off top triple clamp with the handlebar and place it on one side.

Info
Protect the motorcycle and its attachments from damage by covering them. Do not bend the cables and lines.

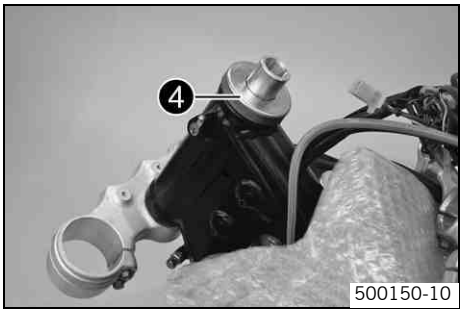

– Remove protector ring ❹.
– Remove the lower triple clamp with the steering stem.
– Remove the upper steering head bearing.

Installing the lower triple clamp 🔧 (EXC SIX DAYS, XC-W USA)

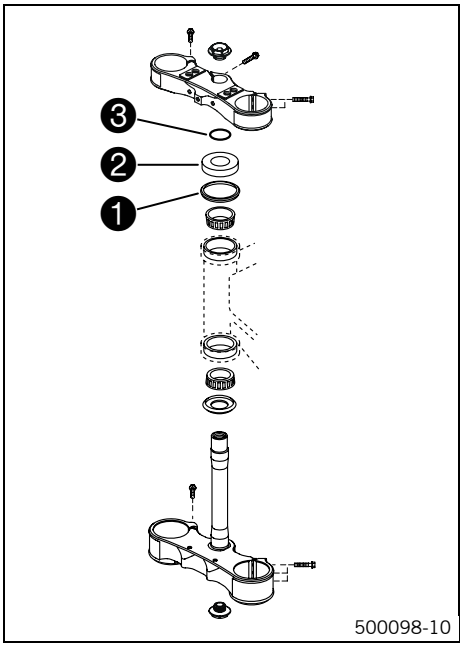

– Clean the bearing and sealing elements, check for damage, and grease.

Long-life grease (☛ p. 107)

– Insert the lower triple clamp with the steering stem. Mount the upper steering head bearing.

Info
Check whether the top steering head seal ❶ is correctly positioned.

– Push up protective ring ❷ and o-ring ❸.

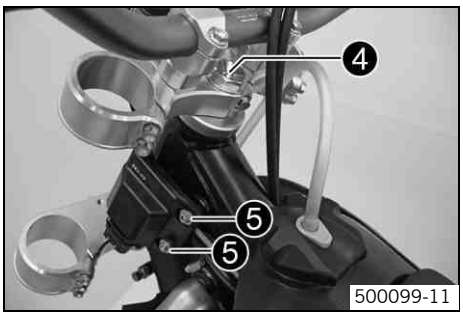

– Position the upper triple clamp with the steering.
– Mount and tighten screw ❹.

Guideline

Screw, top steering head	M20x1.5	10 Nm (7.4 lbf ft)

– Position the clutch line, wiring harness and CDI control unit. Mount and tighten screws ❺.

Guideline

Remaining screws, chassis	M6	10 Nm (7.4 lbf ft)

– Install the front fender. (☛ p. 47)

(XC-W USA)
– Install the start number plate. (☛ p. 48)

(EXC SIX DAYS)
– Refit the headlight mask with the headlight. (☛ p. 47)

– Install the fork legs. 🔧 (☛ p. 42)

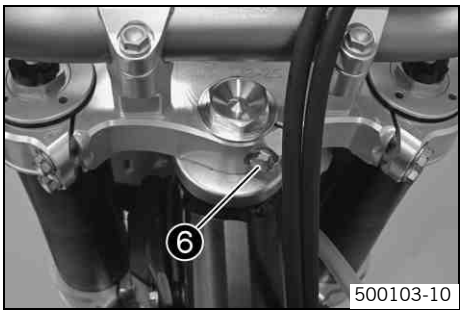

– Mount and tighten screw ❻.

Guideline

Screw, top steering stem	M8	17 Nm (12.5 lbf ft)	**Loctite® 243™**

– Check the cable harness, cable, brake and clutch line for free movement and free laying.
– Check play of steering head bearing. (☛ p. 40)

Installing the lower triple clamp 🔧 (EXC EU, EXC AUS, XC-W ZA)

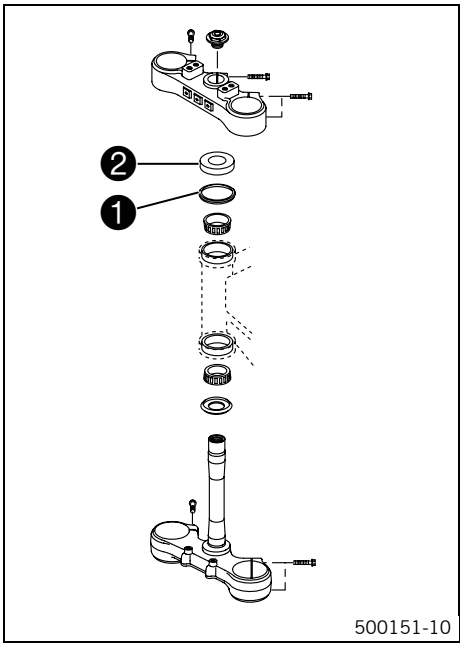

– Clean the bearing and sealing elements, check for damage, and grease.

Long-life grease (☛ p. 107)

– Insert the lower triple clamp with the steering stem. Mount the upper steering head bearing.

Info
Check whether the top steering head seal ❶ is correctly positioned.

– Push on protective ring ❷.

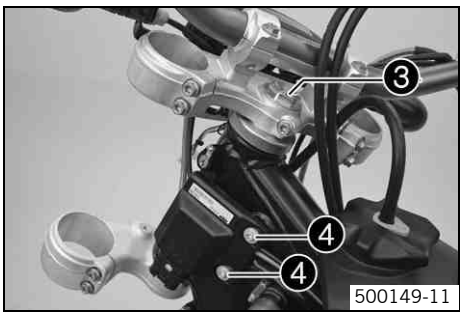

– Position the upper triple clamp with the steering.
– Mount and tighten screw ❸.

Guideline

Screw, top steering head	M20x1.5	10 Nm (7.4 lbf ft)

– Position the clutch line, wiring harness and CDI control unit. Mount and tighten screws ❹.

Guideline

Remaining screws, chassis	M6	10 Nm (7.4 lbf ft)

– Install the front fender. (☛ p. 47)
– Refit the headlight mask with the headlight. (☛ p. 47)
– Install the fork legs. 🔧 (☛ p. 42)

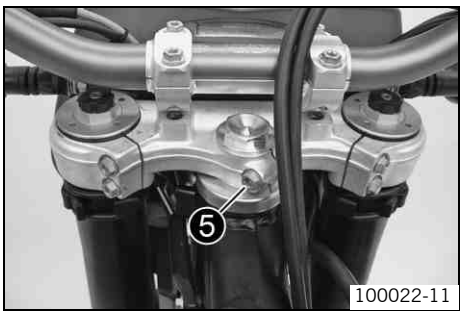

– Tighten screw ❺.

Guideline

Screw, top steering stem	M8	20 Nm (14.8 lbf ft)

– Check the cable harness, cable, brake and clutch line for free movement and free laying.
– Check play of steering head bearing. (☛ p. 40)

Greasing the steering head bearing 🔧

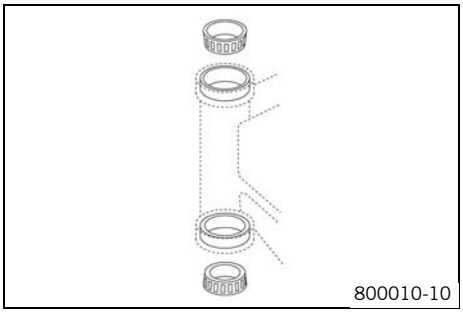

(EXC SIX DAYS, XC-W USA)

– Remove the lower triple clamp. 🔧 (☛ p. 43)
– Install the lower triple clamp. 🔧 (☛ p. 45)

(EXC EU, EXC AUS, XC-W ZA)

– Remove the lower triple clamp. 🔧 (☛ p. 44)
– Install the lower triple clamp. 🔧 (☛ p. 46)

Dismounting the front fender

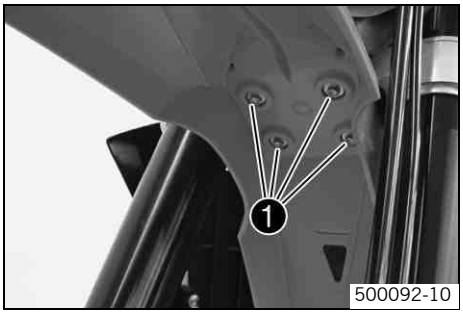

500092-10

- Remove screws ❶. Remove the front fender.
- Make sure that the distance bushings remain in place.

Installing the front fender

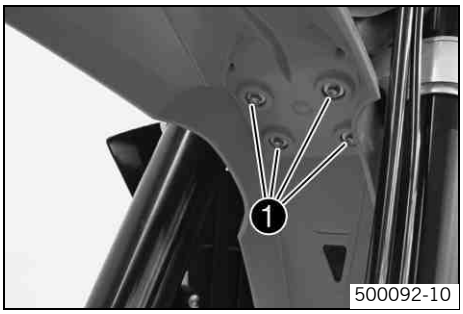

500092-10

- Ensure that the spacing sleeves are mounted in the fender.
- Position the front fender. Mount and tighten screws ❶.

  Guideline

Remaining screws, chassis	M6	10 Nm (7.4 lbf ft)

Info
Take care with the contact between the holding lugs and the start number plate or headlight mask.

Removing headlight mask with headlight (EXC, EXC SIX DAYS, XC-W ZA)

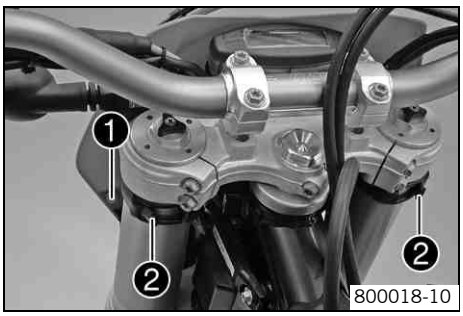

800018-10

- Switch off all electrical equipment.
- Remove screw ❶ and take off clamp.
- Loosen the rubber band ❷. Push up the headlight mask and swing it forwards.

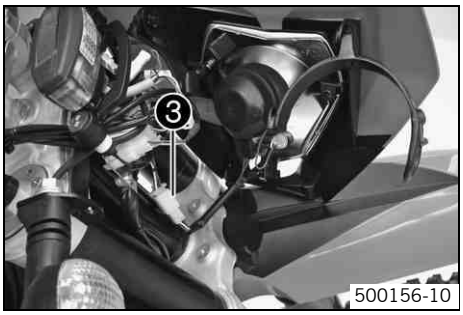

500156-10

- Pull out the electric plug connector ❸ and remove the headlight mask with the headlight.

Refitting the headlight mask with the headlight (EXC, EXC SIX DAYS, XC-W ZA)

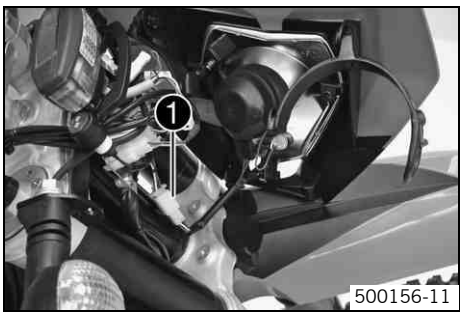

500156-11

- Connect the electric plug connector ❶.

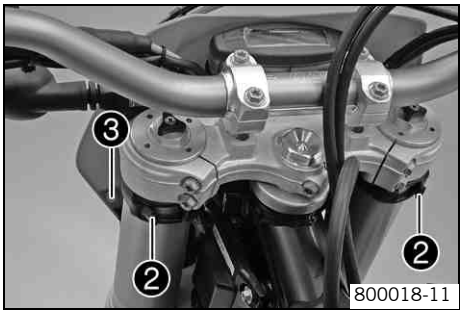

– Position the headlight mask and fix it with the rubber band ❷.

Info
Take care with the contact of the holding lug at the fender.

– Position the brake line and cable harness. Put the clamp on, mount and tighten screw ❸.
– Check the headlamp setting.

Dismount the start number plate (XC-W USA)

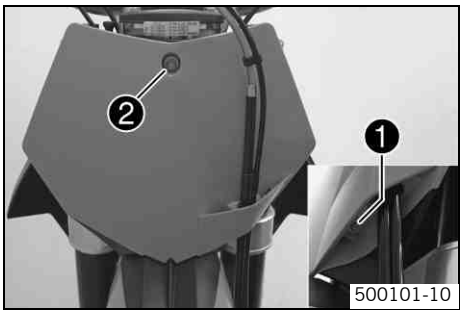

– Remove screw ❶ and take off clamp.
– Remove screw ❷ with distance bushing. Remove the start number plate.

Installing the start number plate (XC-W USA)

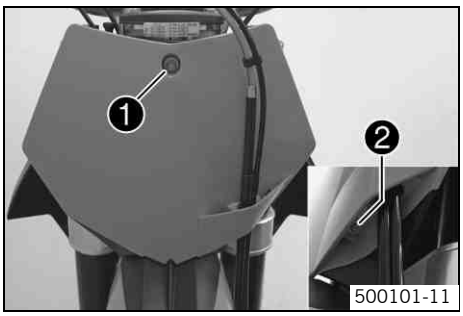

– Position the start number plate. Mount and tighten screw ❶ with the distance bushing.

Guideline

Remaining screws, chassis	M6	10 Nm (7.4 lbf ft)

Info
Take care with the contact of the holding lug at the fender.

– Position the brake line and cable harness. Put the clamp on, mount and tighten screw ❷.

Handlebar position

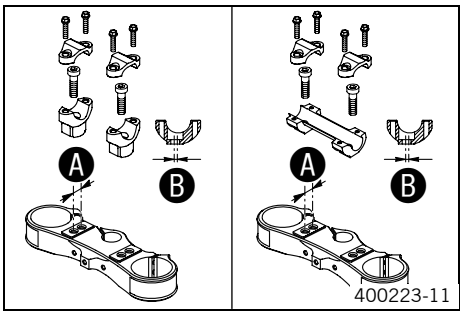

On the upper triple clamp, there are 2 holes at a distance of ❍ to each other.

Distance ❍ between holes	15 mm (0.59 in)

The holes on the handlebar support are placed at a distance of ❍ from the center.

Distance ❍ between holes	3.5 mm (0.138 in)

The handlebar supports can be mounted in 4 different positions.

(EXC SIX DAYS)
The handlebar supports can also be mounted at 2 different heights (with and without spacer).

Thick spacer	9 mm (0.35 in)

Adjusting handlebar position 🔧

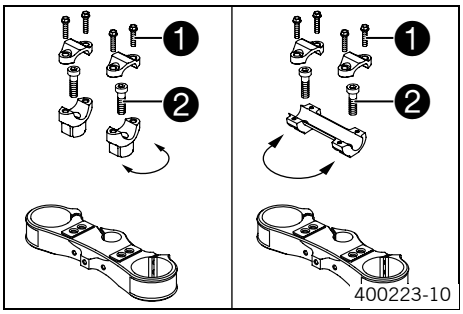

(EXC EU, EXC AUS, XC-W)
– Remove the four screws ❶. Remove the handlebar clamp. Remove the handlebar and lay it to one side.

Info
Protect the motorcycle and its attachments from damage by covering them.
Do not bend the cables and lines.

– Remove the two screws ❷. Remove the handlebar support.

– Place the handlebar support in the required position. Fit and tighten the two screws ❷.

Guideline

Screw, handlebar support	M10	40 Nm (29.5 lbf ft)	**Loctite® 243™**

Info
Position the left and right handlebar supports evenly.

– Position the handlebar.

Info
Make sure cables and wiring are positioned correctly.

– Position the handlebar clamp. Fit and evenly tighten the four screws ❶.

Guideline

Screw, handlebar clamp	M8	20 Nm (14.8 lbf ft)

Info
Make sure the gap width is even.

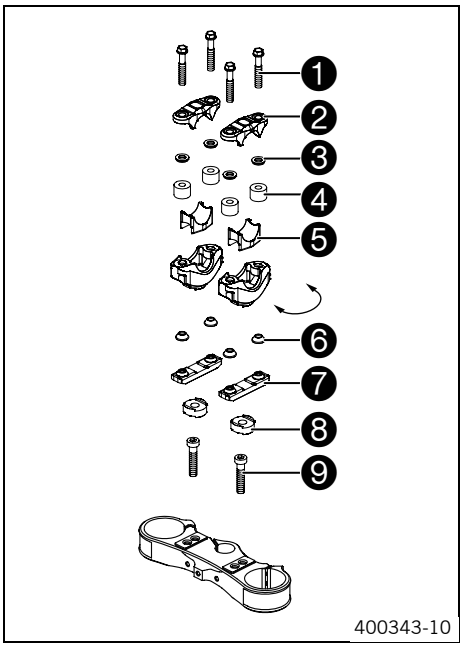

(EXC SIX DAYS)

– Remove the four screws ❶. Remove the handlebar clamps ❷ with rubber washers ❸ and elastomers ❹.
– Remove the handlebar and lay it to one side.

Info
Protect the motorcycle and its attachments from damage by covering them.
Do not bend the cables and lines.

– Remove the lower shells ❺.
– Remove the clamp bar ❼ with the rubber cones ❻.
– Remove the two screws ❾. Remove the handlebar support.
– Place the handlebar support in the required position. Fit and tighten the two screws ❾.

Guideline

Screw, handlebar support	M10	40 Nm (29.5 lbf ft)	**Loctite® 243™**

Condition
❽ Spacer fitted:

Use a M10x35 screw

Condition
without a spacer ❽:

Use a M10x25 screw

Info
Position the left and right handlebar supports evenly.

– Fit the rubber cones ❻ and clamp bar ❼.
– Fit the lower shells ❺.
– Position the handlebar.

Info
Make sure cables and wiring are positioned correctly.

– Position the handlebar clamps ❷ with rubber washers ❸ and elastomers ❹.

Elastomer kit green - soft quality (SXS05125203)
Elastomer kit yellow - medium quality (standard) (SXS05125204)
Elastomer kit red - hard quality (SXS05125205)

Info
The elastomers are available in different versions.

– Fit and evenly tighten the four screws ❶.

Guideline

Screw, handlebar clamp	M8	16 Nm (11.8 lbf ft)

Info
Make sure the gap width is even.

Checking gas Bowden cable route

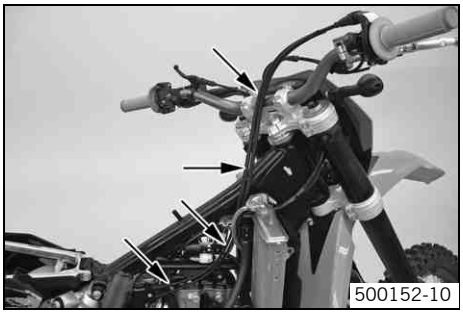
500152-10

– The two gas Bowden cables must run parallel behind the handlebar down to the frame. They must be routed directly on the frame above the tank bearing to the carburetor.

Checking play in the gas Bowden cable

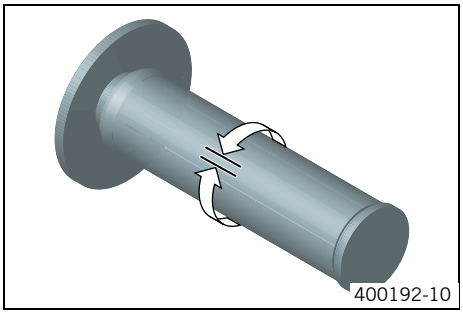
400192-10

– Move the handlebar to the straight-ahead position. Move the throttle grip back and forth slightly to ascertain the play in the gas Bowden cable.

Play in gas Bowden cable	3… 5 mm (0.12… 0.2 in)

» If the gas Bowden cable play does not meet specifications:
  – Adjust the gas Bowden cable play. 🔧 (☛ p. 50)

Danger
Danger of poisoning Exhaust gases are poisonous and can result in unconsciousness and/or death.
  – When running the engine, always make sure there is sufficient ventilation, and do not start or run the engine in a closed space.

– Start the engine and let it run idle. Move the handlebar to and fro over the entire steering range.

The idle speed must not change.

» If the idle speed changes:
  – Adjust the gas Bowden cable play. 🔧 (☛ p. 50)

Adjusting the gas Bowden cable play 🔧

– Dismount the fuel tank. 🔧 (☛ p. 70)
– Check gas Bowden cable route. (☛ p. 50)

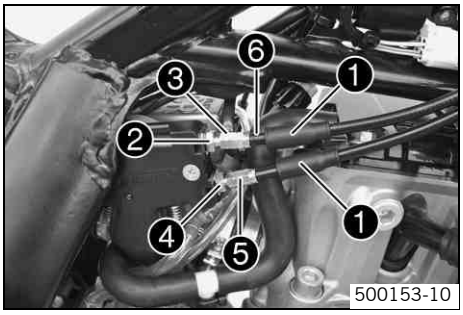

- Move the handlebar to the straight-ahead position.
- Push back bellows ❶.
- Loosen nut ❷. Turn adjusting screw ❸ in as far as possible.
- Loosen nut ❹. Turn adjusting screw ❺ so that there is play in the gas Bowden cable at the throttle grip.

  Guideline

Play in gas Bowden cable	3… 5 mm (0.12… 0.2 in)

- Tighten nut ❹.
- Press and hold the throttle grip in the closed setting. Turn adjusting screw ❸ out until there is no play in the Bowden cable ❻.
- Tighten nut ❷.
- Push bellows ❶ on. Check the throttle grip for smooth operation.
- Install the fuel tank. 🔧 (☛ p. 71)
- Check play in the gas Bowden cable. (☛ p. 50)

Checking for chain dirt accumulation

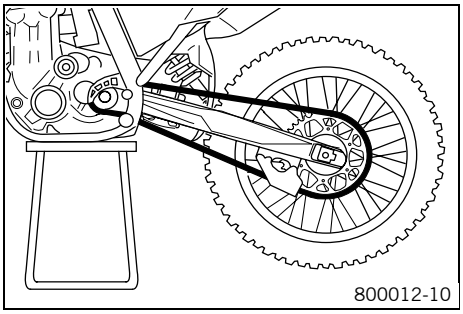

- Check the chain for coarse dirt accumulation.
  - » If the chain is very dirty:
    - Clean the chain. (☛ p. 51)

Cleaning the chain

Warning
Danger of accidents Oil or grease on the tires reduces their grip.

- Remove oil and grease with a suitable cleaning material.

Warning
Danger of accidents Reduced braking due to oil or grease on the brake discs.

- Always keep the brake discs free of oil and grease, and clean them with brake cleaner when necessary.

Warning
Environmental hazard Problem materials cause environmental damage.

- Dispose of oil, grease, filters, fuel, cleaning substances, brake fluid, batteries, etc. according to regulations.

Info
The service life of the chain depends largely on its maintenance.

- Clean the chain regularly and then treat with chain spray.

Chain cleaner (☛ p. 107)
Offroad chain spray (☛ p. 107)

Checking the chain tension

Warning

Danger of accidents Danger caused by incorrect chain tension.

– If the chain tension is too high, the components of the secondary power train (chain, engine sprocket, rear sprocket, bearings in transmission and rear wheel) are under additional load. Apart from premature wear, in extreme cases the chain can rupture or the countershaft of the transmission can break. On the other hand, if the chain is loose, it can fall off the engine sprocket or the rear sprocket and block the rear wheel or damage the engine. Check for correct chain tension and adjust if necessary.

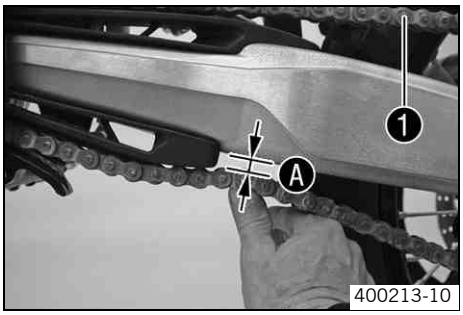

400213-10

– Jack up the motorcycle. (☛ p. 33)
– Push the chain at the end of the chain sliding component upwards to measure the chain tension ❍.

Info

The upper chain section ❶ must be taut.
Chain wear is not always even, so you should repeat this measurement at different chain positions.

Chain tension	8… 10 mm (0.31… 0.39 in)

» If the chain tension does not meet specifications:
  – Adjusting chain tension - after checking. (☛ p. 54)
– Remove the motorcycle from the work stand. (☛ p. 33)

Checking the chain tension when fitting rear wheel

Warning

Danger of accidents Danger caused by incorrect chain tension.

– If the chain tension is too high, the components of the secondary power train (chain, engine sprocket, rear sprocket, bearings in transmission and rear wheel) are under additional load. Apart from premature wear, in extreme cases the chain can rupture or the countershaft of the transmission can break. On the other hand, if the chain is loose, it can fall off the engine sprocket or the rear sprocket and block the rear wheel or damage the engine. Check for correct chain tension and adjust if necessary.

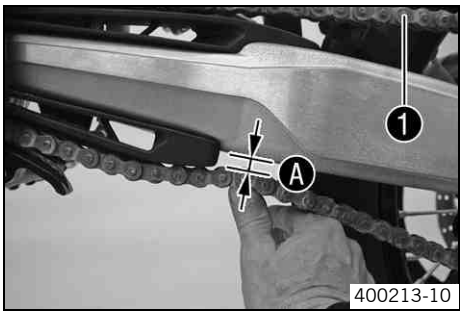

400213-10

– Make sure that the chain adjusters are fitted correctly on the adjusting screws.
– Push the chain at the end of the chain sliding component upwards to measure chain tension ❍.

Info

The upper chain section ❶ must be taut.
Chain wear is not always even, so you should repeat this measurement at different chain positions.

Chain tension	8… 10 mm (0.31… 0.39 in)

» If the chain tension does not meet specifications:
  – Adjust the chain tension when fitting rear wheel. (☛ p. 55)

Checking the rear sprocket / engine sprocket for wear

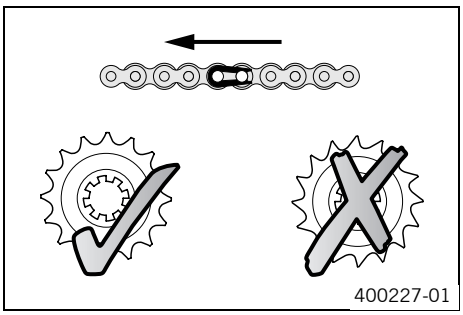
400227-01

– Check the rear sprocket / engine sprocket for wear.
  » If the rear sprocket / engine sprocket are worn:
    – Replace rear sprocket / engine sprocket.

Info

When fitting the chain joint, always make sure that the closed side of the joint faces forward (riding direction).
The engine sprocket, rear sprocket and chain should always be replaced together.

– Check that the chain guide is firmly seated and not worn.

Checking chain wear

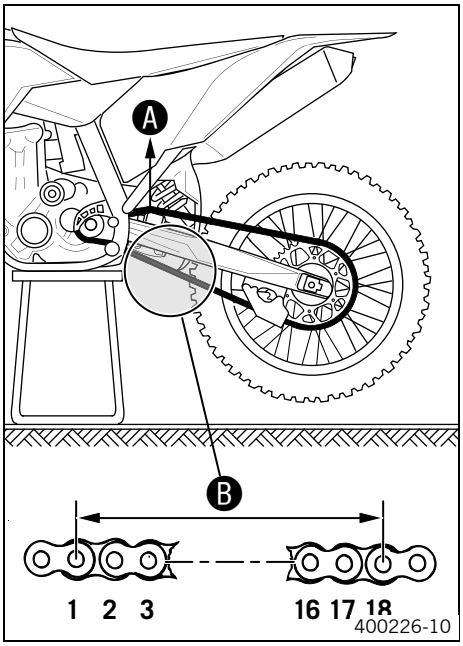

– Jack up the motorcycle. (☛ p. 33)
– Shift gear to neutral.
– Pull the upper chain section with the specified weight ❍.

Guideline

Weight of chain wear measurement	10… 15 kg (22… 33 lb.)

– Measure distance ❍ of 18 chain links in the lower chain section.

Info
Chain wear is not always even, so you should repeat this measurement at different chain positions.

Maximum distance ❍ at the longest chain section	272 mm (10.71 in)

» If the distance ❍ is greater than the specified measurement:
  – Replace the chain.

Info
When you replace the chain, you should also replace the rear sprocket and the engine sprocket.
New chains wear out faster on old, worn sprockets.

– Remove the motorcycle from the work stand. (☛ p. 33)

Adjusting the chain tension

Warning
Danger of accidents Danger caused by incorrect chain tension.

– If the chain tension is too high, the components of the secondary power train (chain, engine sprocket, rear sprocket, bearings in transmission and rear wheel) are under additional load. Apart from premature wear, in extreme cases the chain can rupture or the countershaft of the transmission can break. On the other hand, if the chain is loose, it can fall off the engine sprocket or the rear sprocket and block the rear wheel or damage the engine. Check for correct chain tension and adjust if necessary.

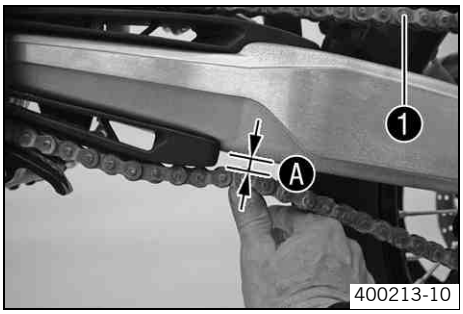

– Jack up the motorcycle. (☛ p. 33)
– Push the chain at the end of the chain sliding component upwards to measure chain tension ❍.

Info
The upper chain section ❶ must be taut.
Chain wear is not always even, so you should repeat this measurement at different chain positions.

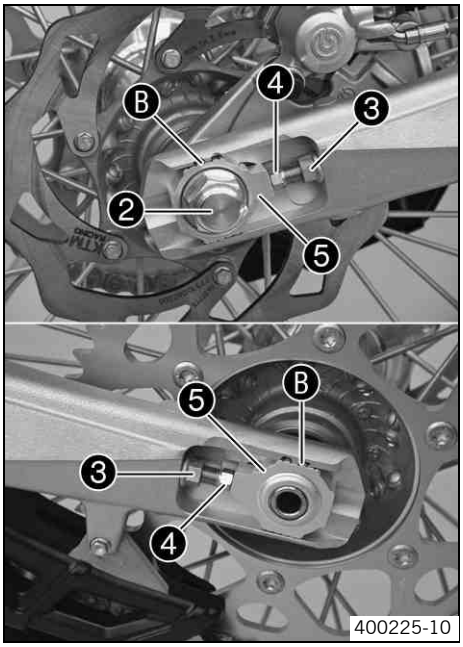

– Loosen nut ❷.
– Loosen nuts ❸.
– Adjust the chain tension by turning the left and right adjusting screws ❹.

Guideline

Chain tension	8… 10 mm (0.31… 0.39 in)
Turn the left and right adjusting screws ❹ so that the markings on the left and right chain adjusters are in the same position relative to the reference marks ❻. The rear wheel is then correctly aligned.	

– Tighten nuts ❸.
– Make sure that chain adjusters ❺ are fitted correctly on the adjusting screws ❹.
– Tighten nut ❷.

Guideline

Nut, rear wheel spindle	M20x1.5	80 Nm (59 lbf ft)

Info
The wide adjustment range of the chain adjusters (32 mm) enables different secondary transmissions with the same chain length.
Chain adjusters ❺ can be turned by 180°.

– Remove the motorcycle from the work stand. (☛ p. 33)

Adjusting chain tension - after checking

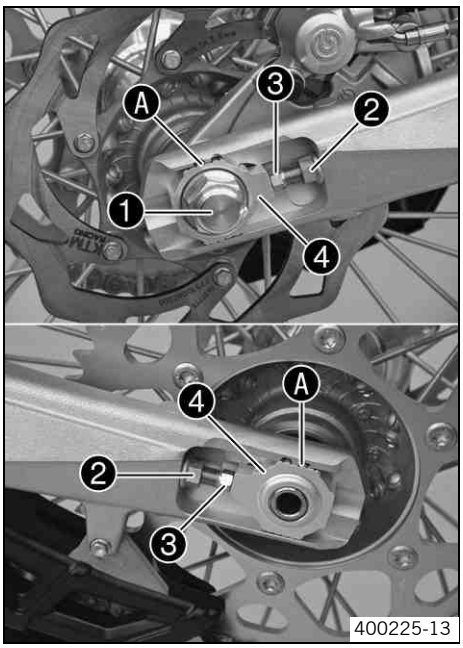

– Loosen nut ❶.
– Loosen nuts ❷.
– Adjust the chain tension by turning the adjusting screws ❸ left and right.

Guideline

Chain tension	8… 10 mm (0.31… 0.39 in)
Turn the adjusting screws ❸ left and right so that the markings on the left and right chain adjusters are in the same position relative to the reference marks ❻. The rear wheel is then correctly aligned.	

– Tighten nuts ❷.
– Make sure that the chain adjusters ❹ are fitted correctly on the adjusting screws ❸.
– Tighten nut ❶.

Guideline

Nut, rear wheel spindle	M20x1.5	80 Nm (59 lbf ft)

Info
The wide adjustment range of the chain adjusters (32 mm) enables different secondary transmissions with the same chain length.
The chain adjusters ❹ can be turned by 180°.

Adjusting chain tension - fitting rear wheel

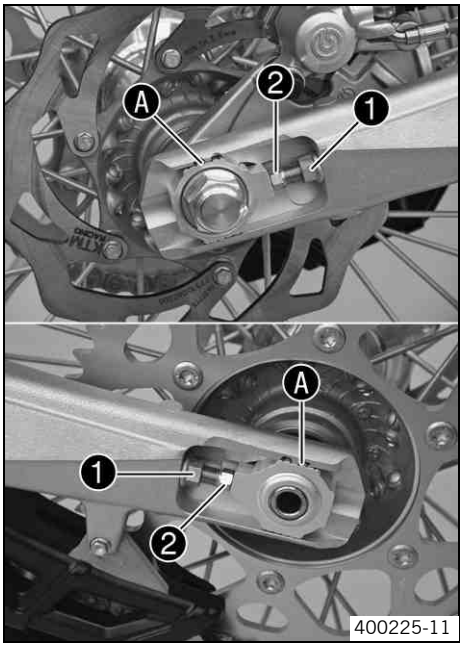

– Loosen nuts ❶.
– Adjust the chain tension by turning the adjusting screws ❷ left and right.

Guideline

Chain tension	8… 10 mm (0.31… 0.39 in)
Turn the adjusting screws ❷ left and right so that the markings on the left and right chain adjusters are in the same position relative to the reference marks Ⓐ. The rear wheel is then correctly aligned.	

– Tighten nuts ❶.

Adjusting chain guide 🔧

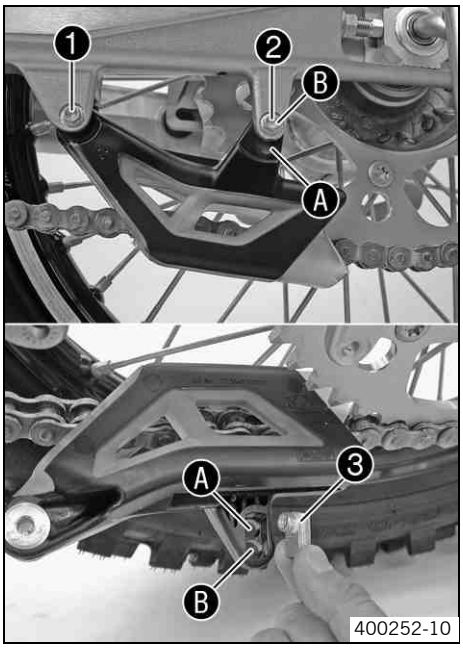

– Remove screws ❶ and ❷. Take off the chain guide.

Condition

Number of teeth: ≤ 44 teeth

– Insert nut ❸ in hole Ⓐ. Position the chain guide.
– Mount and tighten screws ❶ and ❷.

Guideline

Remaining screws, chassis	M6	10 Nm (7.4 lbf ft)

Condition

Number of teeth: ≥ 45 teeth

– Insert nut ❸ in hole Ⓑ. Position the chain guide.
– Mount and tighten screws ❶ and ❷.

Guideline

Remaining screws, chassis	M6	10 Nm (7.4 lbf ft)

Checking the brake discs

Warning

Danger of accidents Reduced braking due to worn brake discs.

– Worn brake discs should be replaced immediately in an authorized KTM workshop.

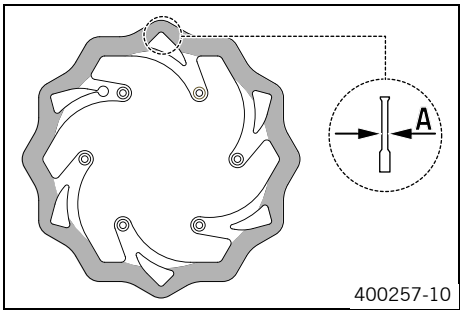

– Check the thickness of the front and rear brake discs at several places on the disc to see if it conforms to measurement ❹.

Info
Wear reduces the thickness of the brake disc around the area used by the brake linings.

Wear limit of brake discs	
Front	2.5 mm (0.098 in)
Rear	3.5 mm (0.138 in)

» If the brake disc thickness is less than the specified value:
  – Change the brake disc.

Checking free travel of hand brake lever

Warning
Danger of accidents Brake system failure.

– If there is no free travel on the hand brake lever, pressure builds up on the front brake in the brake system. The front brake can fail due to overheating. Adjust free travel on hand brake lever according to specifications.

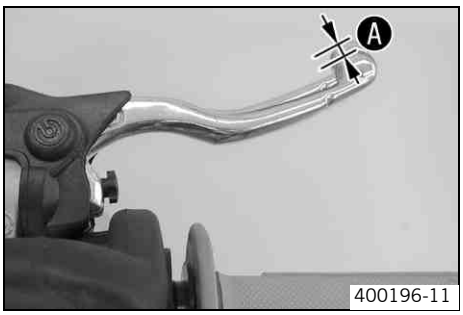

(all XC-W models)
– Push the hand brake lever forwards and check free travel ❹.

Free travel of hand brake lever	≥ 3 mm (≥ 0.12 in)

» If the free travel does not meet specifications:
  – adjust the basic position of handbrake lever. (☛ p. 56)

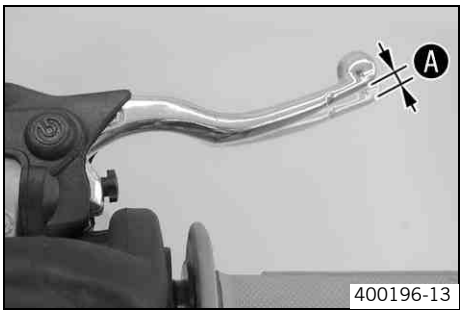

(all EXC models)
– Push the hand brake to the handlebar and check free travel ❹.

Free travel of hand brake lever	≥ 3 mm (≥ 0.12 in)

» If the free travel does not meet specifications:
  – Adjust the free travel of the handbrake lever. (☛ p. 57)

Adjusting basic position of handbrake lever (all XC-W models)

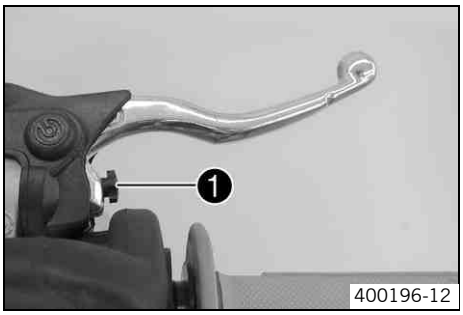

– Adjust the basic setting of the handbrake lever to your hand size by turning adjusting screw ❶.

Info
Turn the adjusting screw clockwise to increase the distance between the handbrake lever and the handlebar.
Turn the adjusting screw counterclockwise to decrease the distance between the handbrake lever and the handlebar.
The range of adjustment is limited.
Turn the adjusting screw by hand only, and do not apply any force.
Do not make any adjustments while riding!

– Check the free travel of the hand brake lever. (☛ p. 56)

Adjusting free travel of handbrake lever (all EXC models)

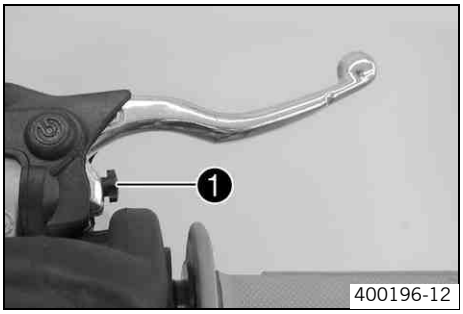

– Adjust the free travel of the handbrake lever with the adjustment screw ❶.

Info
Turn the adjustment screw clockwise to reduce free travel. The pressure point moves away from the handlebar.
Turn the adjustment screw counterclockwise to increase free travel. The pressure point moves towards the handlebar.
The range of adjustment is limited.
Turn the adjusting screw by hand only, and do not apply any force.
Do not make any adjustments while riding!

– Check the free travel of the hand brake lever. (☛ p. 56)

Checking the front brake fluid level

Warning
Danger of accidents Brake system failure.

– If the brake fluid level falls below the **MIN** mark, this indicates a leakage in the brake system or worn-out brake linings. Have the brake system checked in an authorized KTM workshop, and do not ride any further.

Warning
Danger of accidents Reduced braking due to old brake fluid.

– Have the front and rear brake fluid replaced according to the service plan in an authorized KTM workshop.

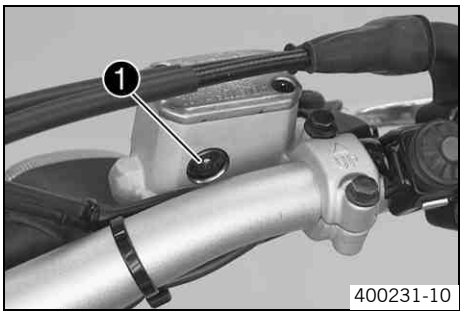

– Move the brake fluid reservoir mounted on the handlebar to a horizontal position.
– Check the brake fluid level in the viewer ❶.
  » If the brake fluid is below the **MIN** mark:
    – Add front brake fluid. 🔧 (☛ p. 57)

Adding front brake fluid 🔧

Warning
Danger of accidents Brake system failure.

– If the brake fluid level falls below the **MIN** mark, this indicates a leakage in the brake system or worn-out brake linings. Have the brake system checked in an authorized KTM workshop, and do not ride any further.

Warning
Skin irritations Brake fluid can cause skin irritation on contact.

– Avoid contact with skin and eyes, and keep out of the reach of children.
– If brake fluid gets into your eyes, rinse thoroughly with water and contact a doctor immediately.

Warning
Danger of accidents Reduced braking due to old brake fluid.

– Have the front and rear brake fluid replaced according to the service plan in an authorized KTM workshop.

Warning
Environmental hazard Problem materials cause environmental damage.

– Dispose of oil, grease, filters, fuel, cleaning substances, brake fluid, batteries, etc. according to regulations.

Info
Never user DOT 5 brake fluid! This is based on silicone oil and is colored purple. Oil seals and brake lines are not designed for DOT 5 brake fluid.
Avoid contact between brake fluid and painted parts. Brake fluid attacks paint!
Use only clean brake fluid from a sealed container!

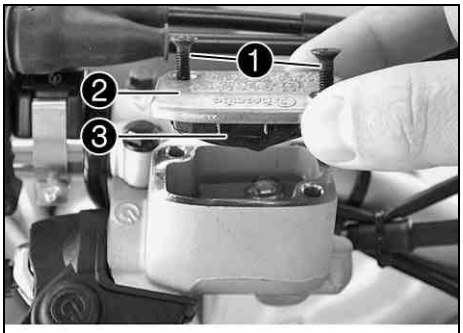

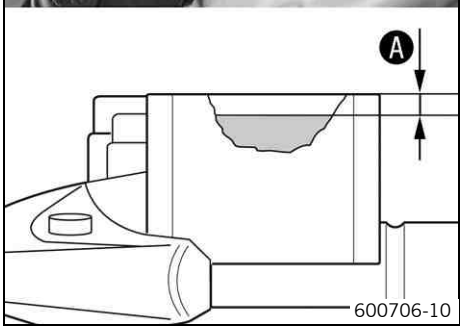

– Move the brake fluid reservoir mounted on the handlebar to a horizontal position.
– Remove screws ❶.
– Remove cover ❷ with membrane ❸.
– Add brake fluid to level Ⓐ.

Guideline

Measurement of Ⓐ	5 mm (0.2 in)

Brake fluid DOT 4 / DOT 5.1 (☛ p. 106)

– Position the cover with the membrane. Mount and tighten the screws.

Info
Clean up overflowed or spilt brake fluid immediately with water.

Checking the front brake linings

Warning
Danger of accidents Reduced braking due to worn brake linings.

– Worn brake linings should be replaced immediately in an authorized KTM workshop.

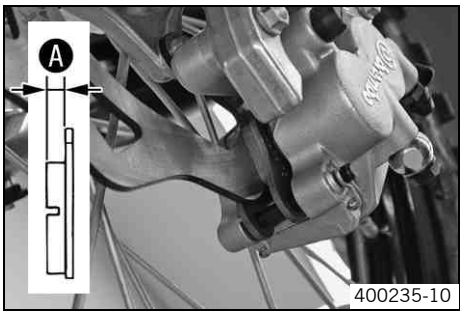

– Check the brake linings for minimum thickness Ⓐ.

Minimum thickness Ⓐ	≥ 1 mm (≥ 0.04 in)

» If the minimum thickness is less than specified:
  – Change the front brake linings. 🔧 (☛ p. 59)

Removing front brake linings 🔧

Warning
Danger of accidents Improper brake maintenance and repair.

– Always have your brake system maintained and repaired in an authorized KTM workshop.

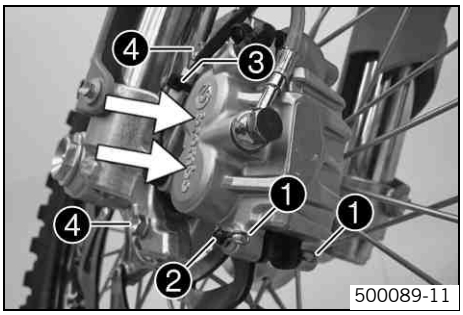

– Press the brake caliper by hand on to the brake disc in order to press back the brake pistons.

Info
Make sure when pushing back the brake pistons that you do not press the brake caliper against the spokes.

– Remove the locking split pins ❶, withdraw the bolt ❷, and take out the brake pads.
– Remove cable clip ❸. Remove screws ❹ and take off brake caliper.
– Clean brake caliper and brake caliper support.

Mounting front brake linings

Warning
Danger of accidents Reduced braking due to oil or grease on the brake discs.

– Always keep the brake discs free of oil and grease, and clean them with brake cleaner when necessary.

Warning
Danger of accidents Reduced braking due to use of non-approved brake linings.

– Brake linings available from accessory suppliers are often not tested and approved for use on KTM vehicles. The construction and friction factor of the brake linings and therefore the brake power can differ considerably from the original KTM brake linings. If brake linings are used that differ from the originals, there is no guarantee that they comply with the original license. The vehicle no longer corresponds to the condition at delivery, and the warranty is no longer valid.

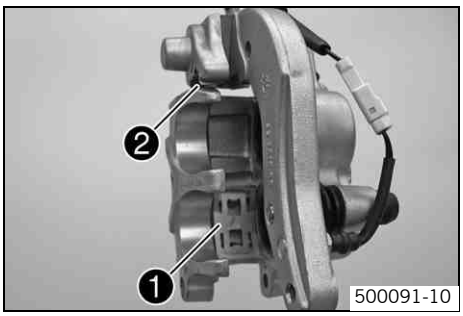

500091-10

– Check the brake discs. (☛ p. 55)
– Check that leaf spring ❶ in the brake caliper and sliding plate ❷ in the brake caliper support are seated correctly.

Info
The arrow on the leaf spring points in the rotation direction of the brake disc.

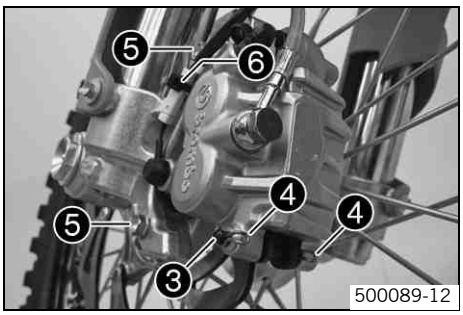

500089-12

– Insert the brake pads, insert bolt ❸, and mount locking split pins ❹.
– Position brake caliper, mount and tighten screws ❺.

Guideline

Screw, front brake caliper	M8	25 Nm (18.4 lbf ft)	**Loctite® 243™**

– Mount cable clip ❻.
– Operate the hand brake lever repeatedly until the brake linings lie on the brake disc and there is a tight spot.

Changing the front brake linings

Warning
Skin irritations Brake fluid can cause skin irritation on contact.

– Avoid contact with skin and eyes, and keep out of the reach of children.
– If brake fluid gets into your eyes, rinse thoroughly with water and contact a doctor immediately.

Warning
Danger of accidents Reduced braking due to old brake fluid.

– Have the front and rear brake fluid replaced according to the service plan in an authorized KTM workshop.

Warning
Environmental hazard Problem materials cause environmental damage.

– Dispose of oil, grease, filters, fuel, cleaning substances, brake fluid, batteries, etc. according to regulations.

Info
Never user DOT 5 brake fluid! This is based on silicone oil and is colored purple. Oil seals and brake lines are not designed for DOT 5 brake fluid.
Avoid contact between brake fluid and painted parts. Brake fluid attacks paint!
Use only clean brake fluid from a sealed container!

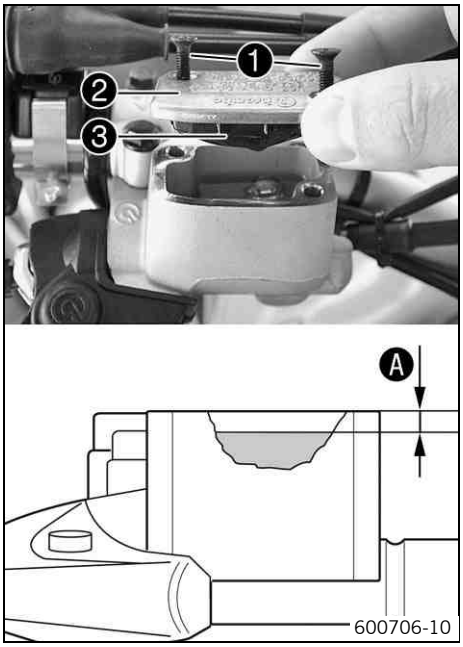

- Remove the front brake linings. 🔧 (☛ p. 58)
- Move the brake fluid reservoir mounted on the handlebar to a horizontal position.
- Remove screws ❶.
- Remove cover ❷ with membrane ❸.
- Press the brake piston back to its basic position and make sure that no brake fluid overflows from the brake fluid reservoir.
- Mount the front brake linings. 🔧 (☛ p. 59)
- Add brake fluid to level Ⓐ.

  Guideline

Measurement of Ⓐ	5 mm (0.2 in)

Brake fluid DOT 4 / DOT 5.1 (☛ p. 106)

- Position the cover with the membrane. Mount and tighten the screws.

Info
Clean up overflowed or spilt brake fluid immediately with water.

Checking free travel of foot brake lever

Warning
Danger of accidents Brake system failure.

- If there is no free travel on the foot brake pedal, pressure builds up on the rear brake in the brake system. The rear brake can fail due to overheating. Adjust free travel on foot brake pedal according to specifications.

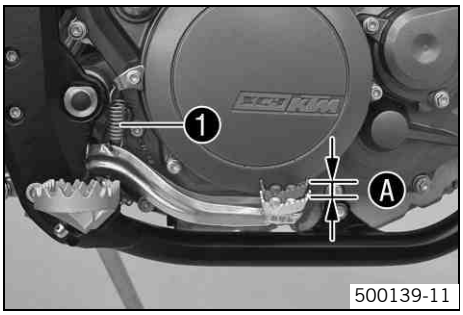

- Disconnect spring ❶.
- Move the foot brake lever backwards and forwards between the end stop and the foot brake cylinder piston bracket and check free travel Ⓐ.

  Guideline

Free travel at foot brake lever	3… 5 mm (0.12… 0.2 in)

  » If the free travel does not meet specifications:
    - Adjust the basic position of the footbrake lever. 🔧 (☛ p. 60)
- Reconnect spring ❶.

Adjusting basic position of footbrake lever 🔧

Warning
Danger of accidents Brake system failure.

- If there is no free travel on the foot brake pedal, pressure builds up on the rear brake in the brake system. The rear brake can fail due to overheating. Adjust free travel on foot brake pedal according to specifications.

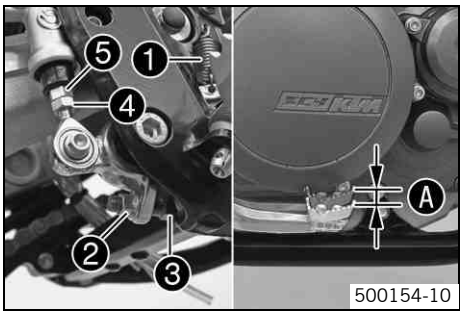

- Disconnect spring ❶.
- Loosen nut ❹ and with push rod ❺, turn it back until you have maximum free travel.
- To adjust the basic position of the footbrake lever individually, lossen nut ❷ and turn screw ❸ accordingly.

Info
The range of adjustment is limited.

- Turn push rod ❺ accordingly until you have free travel Ⓐ. If necessary, adjust the basic position of the footbrake lever.

  Guideline

Free travel at foot brake lever	3… 5 mm (0.12… 0.2 in)

– Hold screw ❸ and tighten nut ❷.

Guideline

Remaining nuts, chassis	M8	30 Nm (22.1 lbf ft)

– Hold push rod ❺ and tighten nut ❹.

Guideline

Remaining nuts, chassis	M6	15 Nm (11.1 lbf ft)

– Reconnect spring ❶.

Checking the rear brake fluid level

Warning

Danger of accidents Brake system failure.

– If the brake fluid level falls below the **MIN** mark, this indicates a leakage in the brake system or worn-out brake linings. Have the brake system checked in an authorized KTM workshop, and do not ride any further.

Warning

Danger of accidents Reduced braking due to old brake fluid.

– Have the front and rear brake fluid replaced according to the service plan in an authorized KTM workshop.

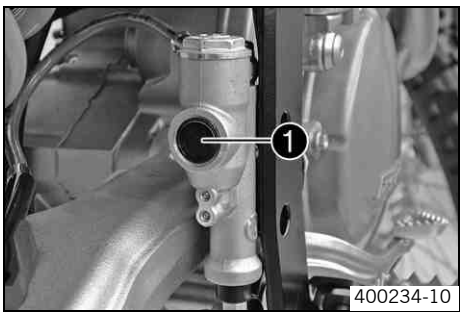

400234-10

– Stand the vehicle upright.
– Check the brake fluid level in the viewer ❶.
  » When in the viewer ❶ an air bubble is visible:
    – Add brake fluid for the rear brake. 🔧 (☛ p. 61)

Adding brake fluid for the rear brake 🔧

Warning

Danger of accidents Brake system failure.

– If the brake fluid level falls below the **MIN** mark, this indicates a leakage in the brake system or worn-out brake linings. Have the brake system checked in an authorized KTM workshop, and do not ride any further.

Warning

Skin irritations Brake fluid can cause skin irritation on contact.

– Avoid contact with skin and eyes, and keep out of the reach of children.
– If brake fluid gets into your eyes, rinse thoroughly with water and contact a doctor immediately.

Warning

Danger of accidents Reduced braking due to old brake fluid.

– Have the front and rear brake fluid replaced according to the service plan in an authorized KTM workshop.

Warning

Environmental hazard Problem materials cause environmental damage.

– Dispose of oil, grease, filters, fuel, cleaning substances, brake fluid, batteries, etc. according to regulations.

Info

Never user DOT 5 brake fluid! This is based on silicone oil and is colored purple. Oil seals and brake lines are not designed for DOT 5 brake fluid.
Avoid contact between brake fluid and painted parts. Brake fluid attacks paint!
Use only clean brake fluid from a sealed container!

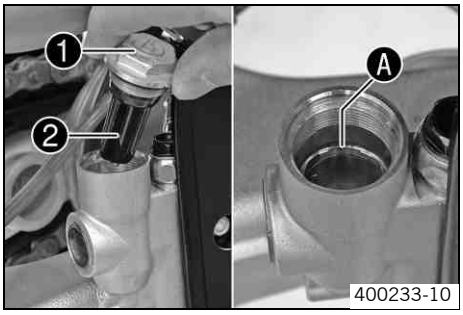

– Stand the vehicle upright.
– Remove screw cap ❶ with membrane ❷ and the O-ring.
– Add brake fluid to level Ⓐ.

Brake fluid DOT 4 / DOT 5.1 (☛ p. 106)

– Mount the screw cap with the membrane and the O-ring.

Info
Clean up overflowed or spilt brake fluid immediately with water.

Checking the rear brake linings

Warning
Danger of accidents Reduced braking due to worn brake linings.

– Worn brake linings should be replaced immediately in an authorized KTM workshop.

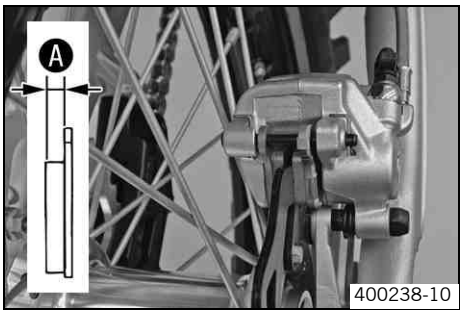

– Check the brake linings for minimum thickness Ⓐ.

Minimum thickness Ⓐ	≥ 1 mm (≥ 0.04 in)

» If the minimum thickness is less than specified:
  – Change the rear brake linings. 🔧 (☛ p. 63)

Removing rear brake linings 🔧

Warning
Danger of accidents Improper brake maintenance and repair.

– Always have your brake system maintained and repaired in an authorized KTM workshop.

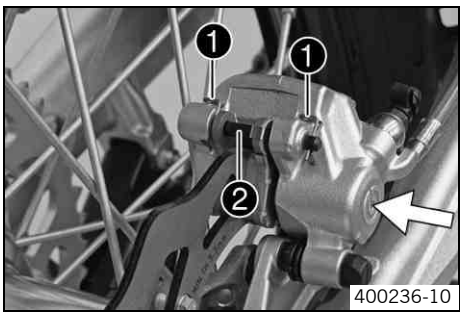

– Press the brake caliper by hand on to the brake disc in order to press back the brake piston.

Info
Make sure when pushing back the brake piston that you do not press the brake caliper against the spokes.

– Remove the locking split pins ❶, withdraw the bolt ❷, and take out the brake pads.
– Clean brake caliper and brake caliper support.

Installing the rear brake linings 🔧

Warning
Danger of accidents Reduced braking due to oil or grease on the brake discs.

– Always keep the brake discs free of oil and grease, and clean them with brake cleaner when necessary.

Warning
Danger of accidents Reduced braking due to use of non-approved brake linings.

– Brake linings available from accessory suppliers are often not tested and approved for use on KTM vehicles. The construction and friction factor of the brake linings and therefore the brake power can differ considerably from the original KTM brake linings. If brake linings are used that differ from the originals, there is no guarantee that they comply with the original license. The vehicle no longer corresponds to the condition at delivery, and the warranty is no longer valid.

– Check the brake discs. (☛ p. 55)

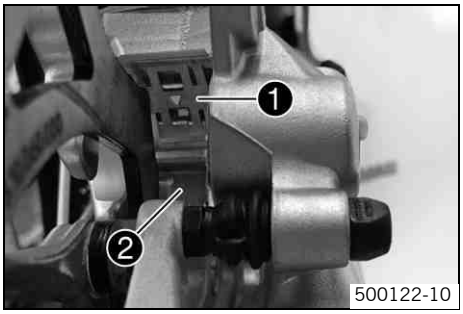

– Check that leaf spring ❶ in the brake caliper and sliding plate ❷ in the brake caliper support are seated correctly.

Info
The arrow on the leaf spring points in the rotation direction of the brake disc.

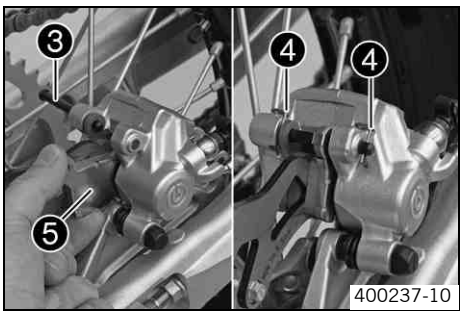

– Fit the brake pads, insert bolt ❸, and mount locking split pins ❹.

Info
Make sure that the decoupling plate ❺ is mounted on the piston side of the brake pad.

– Operate the foot brake lever repeatedly until the brake linings lie on the brake disc and there is a tight spot.

Changing the rear brake linings

Warning
Skin irritations Brake fluid can cause skin irritation on contact.

– Avoid contact with skin and eyes, and keep out of the reach of children.
– If brake fluid gets into your eyes, rinse thoroughly with water and contact a doctor immediately.

Warning
Danger of accidents Reduced braking due to old brake fluid.

– Have the front and rear brake fluid replaced according to the service plan in an authorized KTM workshop.

Warning
Environmental hazard Problem materials cause environmental damage.

– Dispose of oil, grease, filters, fuel, cleaning substances, brake fluid, batteries, etc. according to regulations.

Info
Never user DOT 5 brake fluid! This is based on silicone oil and is colored purple. Oil seals and brake lines are not designed for DOT 5 brake fluid.
Avoid contact between brake fluid and painted parts. Brake fluid attacks paint!
Use only clean brake fluid from a sealed container!

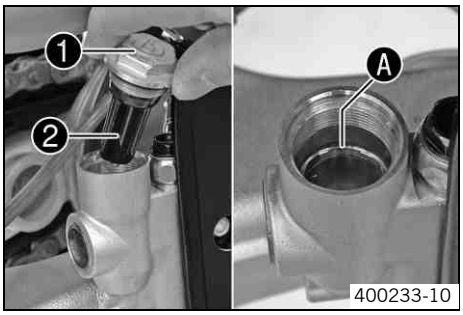

– Remove the rear brake linings. (☛ p. 62)
– Stand the vehicle upright.
– Remove screw cap ❶ with membrane ❷ and the O-ring.
– Press the brake piston back to its basic position and make sure that no brake fluid overflows from the brake fluid reservoir.
– Install the rear brake linings. (☛ p. 62)
– Add brake fluid to level Ⓐ.

Brake fluid DOT 4 / DOT 5.1 (☛ p. 106)

– Mount the screw cap with the membrane and the O-ring.

Info
Clean up overflowed or spilt brake fluid immediately with water.

Removing the front wheel

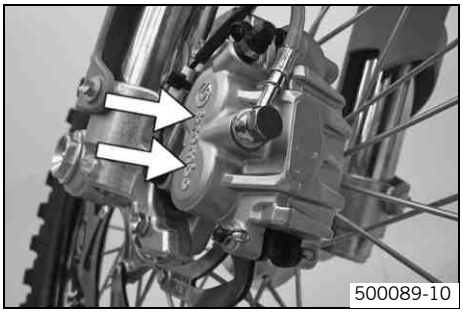
500089-10

– Jack up the motorcycle. (☛ p. 33)
– Press the brake caliper by hand on to the brake disc in order to press back the brake pistons.

Info
Make sure when pushing back the brake pistons that you do not press the brake caliper against the spokes.

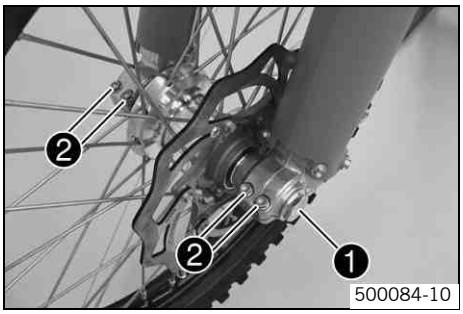

500084-10

– Remove screw ❶.
– Loosen screw ❷.


500085-10

– Holding the front wheel, withdraw the wheel spindle. Take the front wheel out of the fork.

Info
Do not pull the hand brake lever when the front wheel is removed.
Always lay the wheel down in such a way that the brake disc is not damaged.

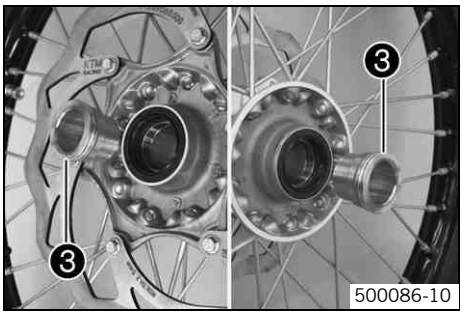

500086-10

– Remove spacing sleeves ❸.

Installing the front wheel

Warning
Danger of accidents Reduced braking due to oil or grease on the brake discs.

– Always keep the brake discs free of oil and grease, and clean them with brake cleaner when necessary.

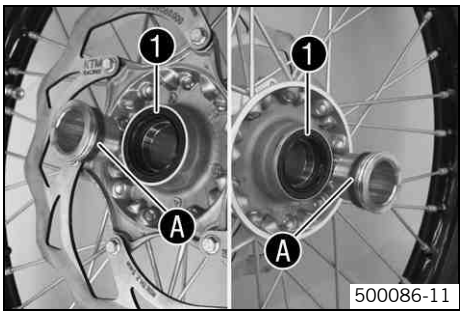

500086-11

– Clean and grease shaft seal rings ❶ and bearing surface Ⓐ of the spacing sleeves.

Long-life grease (☛ p. 107)

– Insert the spacing sleeves.

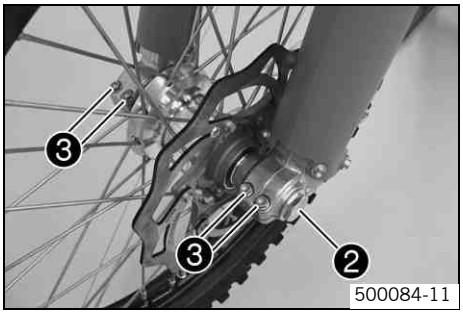

– Lift the front wheel into the fork, position it, and insert the wheel spindle.
– Mount and tighten screw ❷.

Guideline

Screw, front wheel spindle	M24x1.5	45 Nm (33.2 lbf ft)

– Operate the hand brake lever several times until the brake pads are lying correctly on the brake disc.
– Remove the motorcycle from the work stand. (☛ p. 33)
– Pull the front wheel brake and push down hard on the fork several times to align the fork legs.
– Fully tighten screw ❸.

Guideline

Screw, fork stub	M8	15 Nm (11.1 lbf ft)

Removing rear wheel 🔧

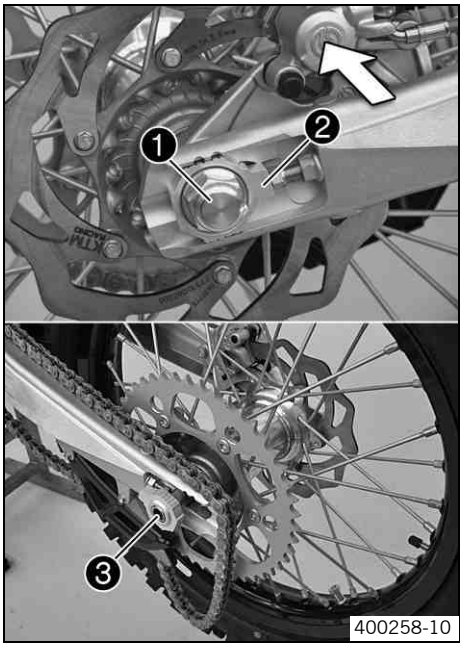

– Jack up the motorcycle. (☛ p. 33)
– Press the brake caliper by hand on to the brake disc in order to press back the brake piston.

Info
Make sure when pushing back the brake piston that you do not press the brake caliper against the spokes.

– Remove nut ❶.
– Remove chain adjuster ❷. Withdraw the wheel spindle ❸ only enough to allow the rear wheel to be pushed forward.
– Push the rear wheel forward as far as possible. Remove the chain from the rear sprocket.
– Holding the rear wheel, withdraw the wheel spindle. Take the rear wheel out of the swing arm.

Info
Do not operate the foot brake when the rear wheel is removed.
Always lay the wheel down in such a way that the brake disc is not damaged.

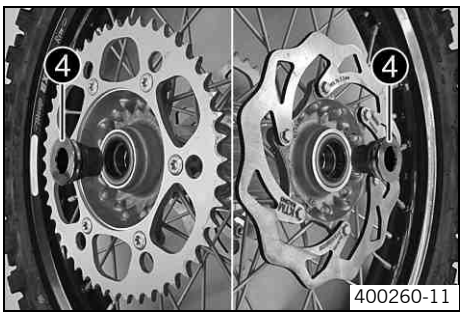

– Remove the spacing sleeves ❹.

Installing the rear wheel 🔧

Warning
Danger of accidents Reduced braking due to oil or grease on the brake discs.

– Always keep the brake discs free of oil and grease, and clean them with brake cleaner when necessary.

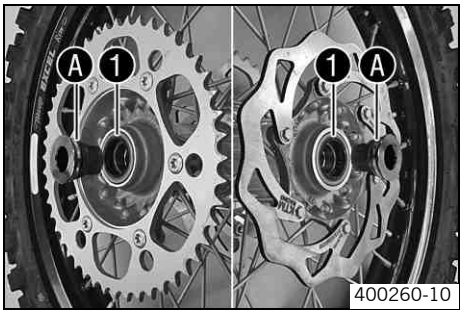

– Clean and grease shaft seal rings ❶ and bearing surface Ⓐ of the spacing sleeves.

Long-life grease (☛ p. 107)

– Insert the spacing sleeves.

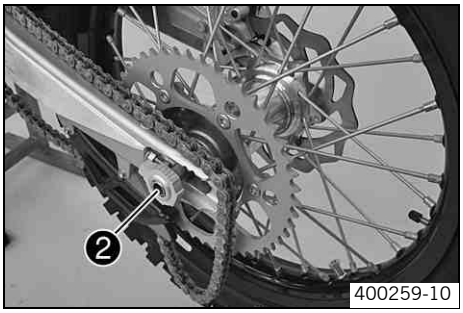

– Lift the rear wheel into the swing arm, position it, and insert the wheel spindle ❷.
– Put the chain on.

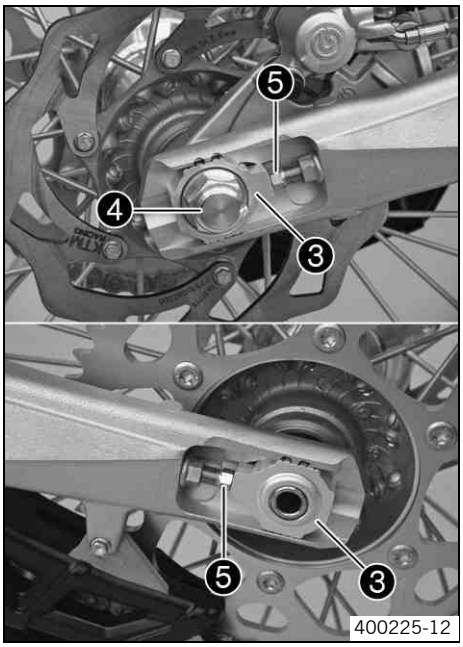

– Position the chain adjuster ❸. Mount nut ❹, but do not tighten it yet.
– Check the chain tension when fitting rear wheel. (☛ p. 52)
– Make sure that the chain adjusters ❸ are fitted correctly on the adjusting screws ❺.
– Tighten nut ❹.

Guideline

Nut, rear wheel spindle	M20x1.5	80 Nm (59 lbf ft)

Info
The wide adjustment range of the chain adjusters (32 mm) enables different secondary transmissions with the same chain length.
The chain adjusters ❸ can be turned by 180°.

– Operate the foot brake lever repeatedly until the brake linings lie on the brake disc and there is a tight spot.
– Remove the motorcycle from the work stand. (☛ p. 33)

Tire condition checking

Info
Only mount tires approved or recommended by KTM.
Other tires could have a negative effect on riding behavior.
The type, condition and air pressure of the tires all have an important impact on the riding behavior of the motorcycle.
The front and rear wheels must be mounted with tires with similar profiles.
Worn tires have a negative effect on riding behavior, especially on wet surfaces.

– Examine the front and rear tires for cuts, foreign bodies and other damage.
  » If you find cuts, foreign bodies or other damage on a tire:
    – Change the tire.
– Check the depth of the tread.

Info
Note local national regulations concerning the minimum tread depth.

Minimum tread depth	≥ 2 mm (≥ 0.08 in)

  » If the tread depth is less than the minimum allowable depth:
    – Change the tire.

Checking tire air pressure

Info
Low tire air pressure leads to abnormal wear and overheating of the tire.
Correct tire air pressure ensures optimal riding comfort and maximum tire service life.

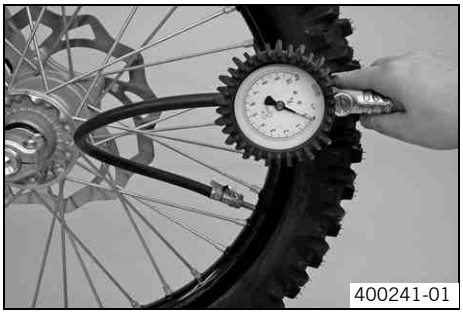
400241-01

– Remove dust cap.
– Check tire air pressure when tires are cold.

Tire air pressure off road	
Front	1.0 bar (15 psi)
Rear	1.0 bar (15 psi)
Road tire pressure (all EXC models)	
front	1.5 bar (22 psi)
Rear	2.0 bar (29 psi)

» If the tire pressure does not meet specifications:
  – Correct tire pressure.
– Mount dust cap.

Checking spoke tension

Warning
Danger of accidents Unstable riding behavior due to loose spokes.

– If you ride with loose spokes, the spokes can break. Have the spoke tension corrected in an authorized KTM workshop.

Info
A loose spoke can cause wheel imbalance, which leads to more loose spokes in a short time.
If the spokes are too tight, they can break due to local overload.
Check the spoke tension regularly, especially on a new motorcycle.

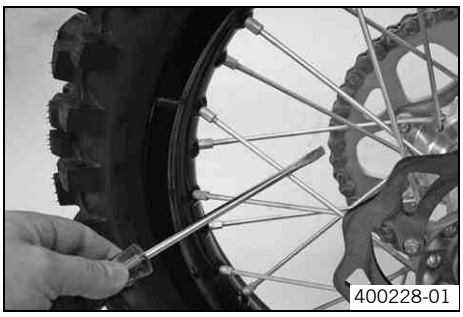
400228-01

– To check spoke tension, tap each spoke with a screwdriver.
Guideline

You should hear a high note.

Spoke nipple, front wheel	M4,5	5 Nm (3.7 lbf ft)
Spoke nipple, rear wheel	M5	5 Nm (3.7 lbf ft)

Info
If you hear different tone frequencies from different spokes, this is an indication of different spoke tensions.

Removing the battery

Warning
Risk of injury Battery acid and battery gases cause serious chemical burns.

– Keep batteries out of the reach of children.
– Wear suitable protective clothing and goggles.
– Avoid contact with battery acid and battery gases.
– Keep the battery away from sparks or open fire. Charge only in well-ventilated rooms.
– In the event of skin contact, rinse with large amounts of water. If battery acid gets in the eyes, rinse with water for at least 15 minutes and contact a physician.

– Switch off all power-consuming components and switch off the engine.
– Remove the seat. (☛ p. 69)

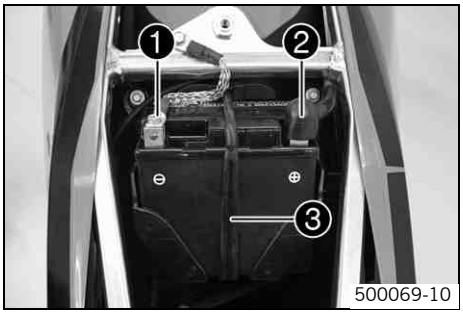

- Disconnect the negative (minus) cable ❶ of the battery.
- Pull back the plus pole cover ❷ and disconnect the positive (plus) cable of the battery.
- Hang the rubber band ❸ out to the bottom.
- Lift the battery up.

Installing the battery

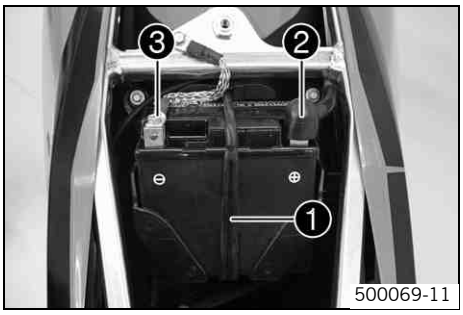

- Place the battery in the battery holder.

4Ah battery (YTX5L-BS) (☛ p. 95)

- Reconnect the rubber band ❶.
- Attach the plus cable and replace the plus pole cover ❷.
- Attach the minus cable ❸.
- Mount the seat. (☛ p. 70)

Recharging the battery

Warning
Risk of injury Battery acid and battery gases cause serious chemical burns.

- Keep batteries out of the reach of children.
- Wear suitable protective clothing and goggles.
- Avoid contact with battery acid and battery gases.
- Keep the battery away from sparks or open fire. Charge only in well-ventilated rooms.
- In the event of skin contact, rinse with large amounts of water. If battery acid gets in the eyes, rinse with water for at least 15 minutes and contact a physician.

Warning
Environmental hazard Components and battery acid are a danger to the environment.

- Do not dispose of batteries in normal household waste. Take defective or used batteries to a battery recycling operator.

Warning
Environmental hazard Problem materials cause environmental damage.

- Dispose of oil, grease, filters, fuel, cleaning substances, brake fluid, batteries, etc. according to regulations.

Info
Even if there is no load on the battery, it loses power every day.
The charge state and the type of charge are very important for the service life of the battery.
Fast recharging with a high charge current shortens the battery's service life.
If the charge current, the charge voltage and the charge time are exceeded, electrolyte escapes through the breathing holes.
The battery capacity is then reduced.
If the battery is discharged from starting, it must be recharged immediately.
If it stands for a long time in a discharged state, the battery becomes over-discharged and sulfated, and then it is destroyed.
The battery is maintenance-free, i.e., the acid level does not have to be checked.

- Switch off all power consumers and switch off the engine.
- Remove the seat. (☛ p. 69)
- Disconnect the minus (negative) cable of the battery to avoid damage to the motorcycle's electronics.

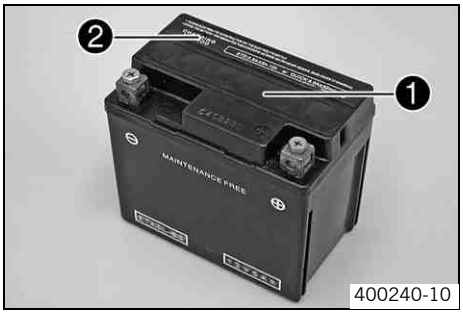

400240-10

– Connect the battery charger to the battery. Switch on the battery charger.

Battery charger (58429074000)

You can also use the battery charger to test rest potential and start potential of the battery, and to test the generator. With this device, you cannot overcharge the battery.

Info
Never remove the lid ❶.
Charge the battery with at most 10% of the capacity specified on the battery ❷.

– Switch off the charger after charging. Disconnect the battery.

Guideline

The charge current, charge voltage and charge time must not be exceeded.	
Charge the battery regularly when the motorcycle is not in use.	3 months

– Mount the seat. (☛ p. 70)

Removing a fuse

– Switch off all power-consuming components and switch off the engine.
– Dismount the air filter box lid. (☛ p. 74)
– Remove the protection cover ❶.

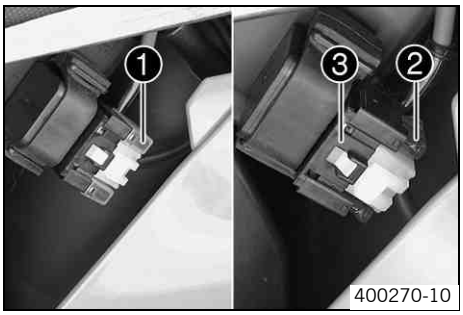
400270-10

Info
The fuse ❷ is located in the starter relay ❸ under the filter box cover.

– Remove the fuse ❷.

Installing the fuse

Warning
Fire hazard The electrical system can be overloaded by the use of incorrect fuses.
– Use only fuses with the prescribed amperage. Never by-pass or repair fuses.

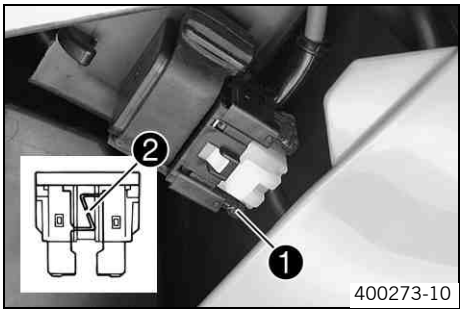
400273-10

– Insert the fuse.

Fuse (58011109110)

Info
A reserve fuse ❶ is located in the starter relay.
Replace a burned-out fuse ❷ only by an equivalent fuse.
If the new fuse burns out, contact an authorized KTM workshop.

– Replace the protection cover.
– Install the air filter box lid. (☛ p. 74)

Removing the seat

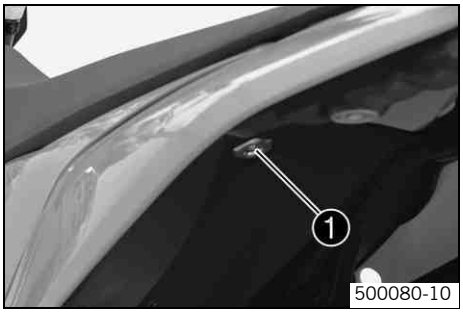
500080-10

– Remove screw ❶. Lift up the seat at the rear, pull it back and then remove from above.

Mounting the seat


500068-01

- Hook in the front of the seat at the collar sleeve of the fuel tank, lower it at the rear and simultaneously push it forward.
- Make sure that the seat is correctly locked in.
- Mount and tighten the screw of the seat fixing.

  Guideline

Remaining screws, chassis	M6	10 Nm (7.4 lbf ft)

Dismounting the fuel tank

Danger

Fire hazard Fuel can easily catch fire.

- Never fill up the vehicle near open flames or burning cigarettes, and always switch off the engine first. Be careful that no fuel is spilt, especially on hot vehicle components. Clean up spilt fuel immediately.
- Fuel in the fuel tank expands when warm and can escape if the tank is overfilled. See specifications on filling up with fuel.

Warning

Danger of poisoning Fuel is poisonous and a health hazard.

- Avoid contact between fuel and skin, eyes and clothing. Do not inhale fuel vapors. If fuel gets into your eyes, rinse immediately with water and contact a doctor. Wash affected skin areas immediately with soap and water. If fuel is swallowed, contact a doctor immediately. Change clothing that has come into contact with fuel. Store fuel in a suitable canister according to regulations and keep it out of the reach of children.

- Remove the seat. (☛ p. 69)
- Turn handle ❶ of the fuel tap to the **OFF** position. (Figure 500137-10☛ p. 20)
- Pull off the fuel hose.

Info

Remaining fuel may run out of the fuel hose.

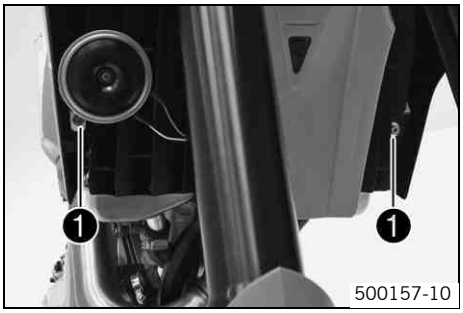

500157-10

- Remove screws ❶ with collar sleeve.

(all EXC models)

- Hang the horn and horn bracket to one side.

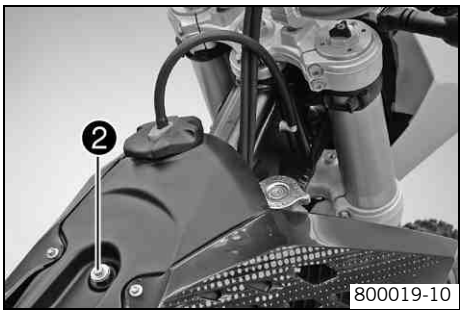

800019-10

- Remove screw ❷ with collar sleeve.
- Remove the tube from the fuel tank vent line.

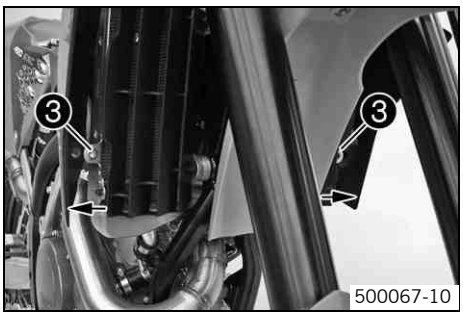

500067-10

- Pull both spoilers to the side of the radiator bracket ❸ and take the fuel tank away upwards.

Installing the fuel tank

Danger

Fire hazard Fuel can easily catch fire.

- Never fill up the vehicle near open flames or burning cigarettes, and always switch off the engine first. Be careful that no fuel is spilt, especially on hot vehicle components. Clean up spilt fuel immediately.
- Fuel in the fuel tank expands when warm and can escape if the tank is overfilled. See specifications on filling up with fuel.

Warning

Danger of poisoning Fuel is poisonous and a health hazard.

- Avoid contact between fuel and skin, eyes and clothing. Do not inhale fuel vapors. If fuel gets into your eyes, rinse immediately with water and contact a doctor. Wash affected skin areas immediately with soap and water. If fuel is swallowed, contact a doctor immediately. Change clothing that has come into contact with fuel.

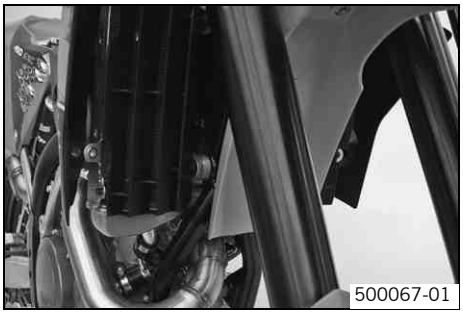
500067-01

- Position the fuel tank and install the two spoilers to the side of the radiator fixing.
- Make sure that no cables or Bowden cables are trapped or damaged.

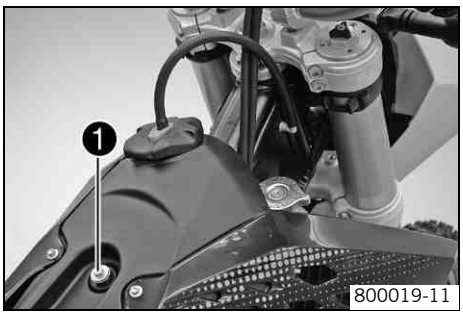

800019-11

- Mount the fuel tank vent hose.
- Mount and tighten screw ❶ with the collar sleeve.

  Guideline

Remaining screws, chassis	M6	10 Nm (7.4 lbf ft)

(all EXC models)

- Position the horn with the horn bracket.

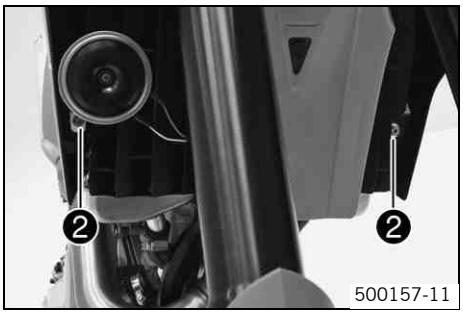

500157-11

- Mount and tighten screws ❷ with the collar sleeve.

  Guideline

Remaining screws, chassis	M6	10 Nm (7.4 lbf ft)

- Connect the fuel hose.
- Mount the seat. (☛ p. 70)

Cooling system

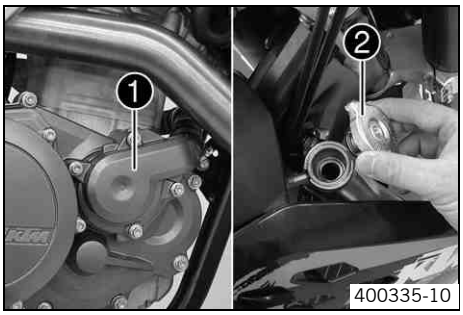

400335-10

The water pump ❶ in the engine forces the coolant to flow.
The pressure resulting from the warming of the cooling system is regulated by a valve in the radiator cap ❷. The specified coolant temperature is therefore permissible without danger of function problems.

120 °C (248 °F)

Cooling is effected by the air stream.
The lower the speed, the less the cooling effect. Dirty cooling fins also reduce the cooling effect.

(EXC SIX DAYS, XC-W ZA)

The radiator fan provides extra cooling. It is controlled by a thermoswitch.

Checking antifreeze and coolant level

Warning

Danger of scalding The coolant gets very hot when the motorcycle is driven and is under high pressure.

– Do not open the radiator, radiator hoses or other cooling system components when the engine is hot. Allow the engine and cooling system to cool down. If you scald yourself, hold the affected area under cold water immediately.

Warning

Danger of poisoning Coolants are poisonous and a health hazard.

– Avoid contact between coolants and skin, eyes and clothing. If fuel gets into your eyes, rinse immediately with water and contact a doctor. Wash affected skin areas immediately with soap and water. If coolant is swallowed, contact a doctor immediately. Change clothes that have come into contact with coolants. Keep coolants out of the reach of children.

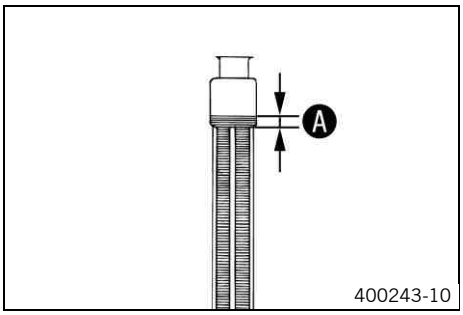

– Stand the motorcycle upright on a horizontal surface.
– Remove the radiator cap.
– Check antifreeze of coolant.

−25... −45 °C (−13... −49 °F)

» If the antifreeze of the cooling liquid does not meet specifications:
  – Correct antifreeze of coolant.

– Check the coolant level in the radiator.

Coolant level Ⓐ above radiator fins.	10 mm (0.39 in)

» If the level of the cooling liquid does not meet specifications:
  – Correct the coolant level.

Alternative 1

Coolant (☛ p. 106)

Alternative 2

Coolant (mixed ready to use) (☛ p. 106)

– Refit the radiator cap.

Checking the coolant level

Warning

Danger of scalding The coolant gets very hot when the motorcycle is driven and is under high pressure.

– Do not open the radiator, radiator hoses or other cooling system components when the engine is hot. Allow the engine and cooling system to cool down. If you scald yourself, hold the affected area under cold water immediately.

Warning

Danger of poisoning Coolants are poisonous and a health hazard.

– Avoid contact between coolants and skin, eyes and clothing. If fuel gets into your eyes, rinse immediately with water and contact a doctor. Wash affected skin areas immediately with soap and water. If coolant is swallowed, contact a doctor immediately. Change clothes that have come into contact with coolants. Keep coolants out of the reach of children.

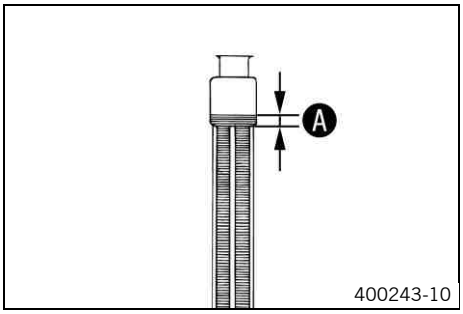

– Stand the motorcycle upright on a horizontal surface.
– Remove the radiator cap.
– Check the coolant level in the radiator.

Coolant level Ⓐ above radiator fins.	10 mm (0.39 in)

» If the level of the cooling liquid does not meet specifications:
  – Correct the coolant level.

Alternative 1

Coolant (☛ p. 106)

Alternative 2

Coolant (mixed ready to use) (☛ p. 106)

– Refit the radiator cap.

Draining coolant

Warning
Danger of scalding The coolant gets very hot when the motorcycle is driven and is under high pressure.

– Do not open the radiator, radiator hoses or other cooling system components when the engine is hot. Allow the engine and cooling system to cool down. If you scald yourself, hold the affected area under cold water immediately.

Warning
Danger of poisoning Coolants are poisonous and a health hazard.

– Avoid contact between coolants and skin, eyes and clothing. If fuel gets into your eyes, rinse immediately with water and contact a doctor. Wash affected skin areas immediately with soap and water. If coolant is swallowed, contact a doctor immediately. Change clothes that have come into contact with coolants. Keep coolants out of the reach of children.

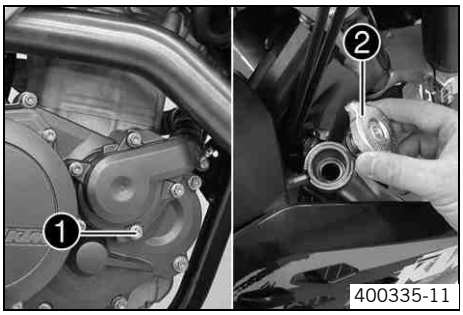

– Stand the vehicle upright.
– Place a suitable container under the water pump cover.
– Remove screw ❶. Remove the radiator cap ❷.
– Completely drain the coolant.
– Mount and tight screw ❶ with a new seal ring.
Guideline

Screw, water pump cover	M6x25	10 Nm (7.4 lbf ft)

Refilling coolant

Warning
Danger of poisoning Coolants are poisonous and a health hazard.

– Avoid contact between coolants and skin, eyes and clothing. If fuel gets into your eyes, rinse immediately with water and contact a doctor. Wash affected skin areas immediately with soap and water. If coolant is swallowed, contact a doctor immediately. Change clothes that have come into contact with coolants. Keep coolants out of the reach of children.

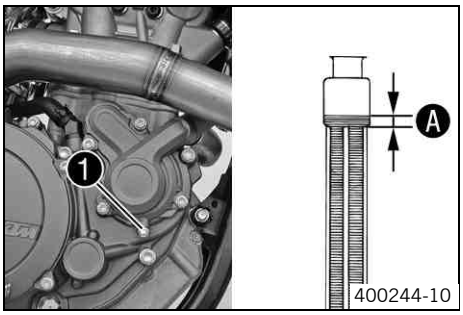

– Make sure that the screw ❶ is tightened.
– Stand the vehicle upright.
– Pour coolant in up to measurement Ⓐ above the radiator fins.
Guideline

10 mm (0.39 in)

Coolant	0.95 l (1 qt.)	Coolant (☛ p. 106)
		Coolant (mixed ready to use) (☛ p. 106)

– Refit the radiator cap.
– Make a short test ride.
– Check the coolant level. (☛ p. 72)

Glass fiber yarn filling of main silencer

The main silencer is filled with glass fiber yarn.
Over a period, the fibers of the insulating material vanish into the air, and the silencer "burns out".
Not only is the noise level higher, the performance characteristic changes.

Removing main silencer

Warning

Danger of burns The exhaust system gets very hot when the vehicle is driven.

– Allow the exhaust system to cool down. Do not touch hot components.

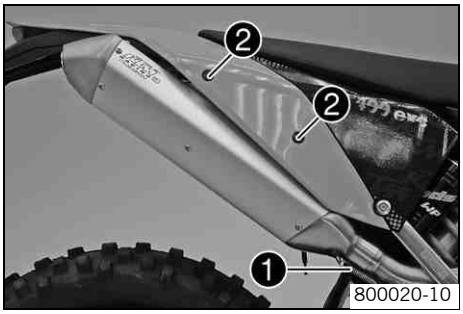

– Disconnect spring ❶.
– Remove screws ❷ and take off main silencer.

Installing the main silencer

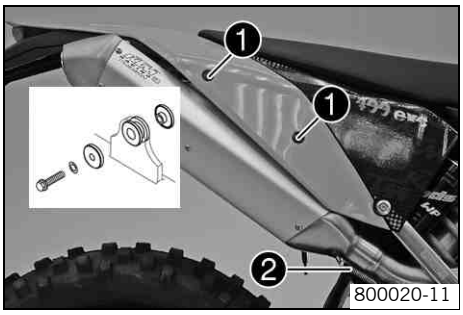

– Mount the main silencer. Mount and tighten screws ❶.

Guideline

Remaining screws, chassis	M6	10 Nm (7.4 lbf ft)

– Reconnect spring ❷.

Dismounting the air filter box lid

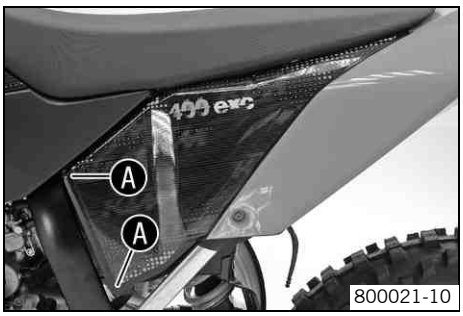

– Pull off the air filter box lid in area Ⓐ to the side and remove to the front.

Installing the air filter box lid

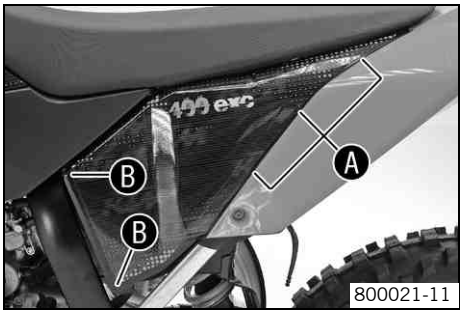

– Insert the air filter box lid into the rear area Ⓐ and clip it into the front area Ⓑ.

Removing the air filter

Note

Engine failure Unfiltered intake air has a negative effect on the service life of the engine.

– Never ride the vehicle without an air filter since dust and dirt can get into the engine and result in increased wear.

Warning

Environmental hazard Problem materials cause environmental damage.

– Dispose of oil, grease, filters, fuel, cleaning substances, brake fluid, batteries, etc. according to regulations.

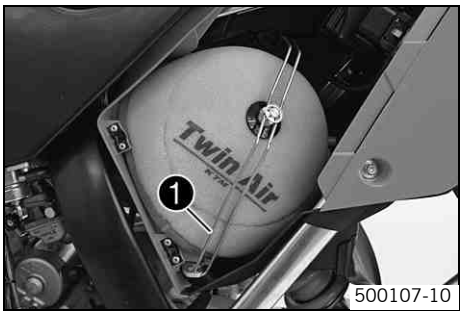

– Dismount the air filter box lid. (☛ p. 74)
– Hang the air filter holder ❶ out to the bottom and swing it to the side. Remove the air filter with the air filter support.
– Remove the air filter from the air filter support.

Installing the air filter

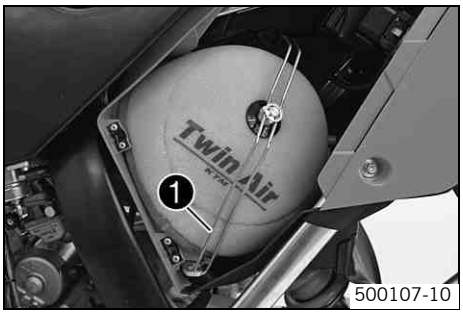

– Mount the clean air filter onto the air filter support.
– Put in both parts together, position them and fix them with the air filter support ❶.

Info

If the air filter is not correctly mounted, dust and dirt can penetrate into the engine and can cause damage.

– Install the air filter box lid. (☛ p. 74)

Cleaning air filter

Warning

Environmental hazard Problem materials cause environmental damage.

– Dispose of oil, grease, filters, fuel, cleaning substances, brake fluid, batteries, etc. according to regulations.

Info

Do not clean the air filter with fuel or petroleum since these substances attack the foam.

– Remove the air filter. 🔧 (☛ p. 75)
– Wash the air filter thoroughly in special cleaning liquid and allow it to dry properly.

Air filter cleaner (☛ p. 107)

Info

Only press the air filter to dry it, never wring it out.

– Oil the dry air filter with a high quality filter oil.

Oil for foam air filter (☛ p. 108)

– Clean the air filter box.
– Check carburetor connection boot for damage and tightness.
– Install the air filter. 🔧 (☛ p. 75)

Adjusting basic position of clutch lever

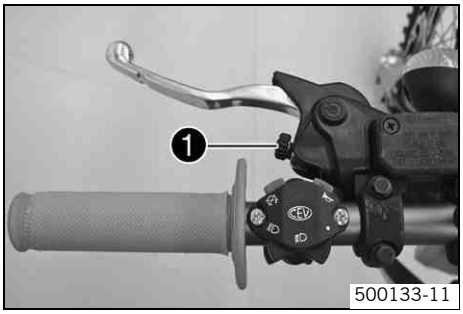

– Adjust the basic setting of the clutch lever to your hand size by turning adjusting screw ❶.

Info
Turn the adjusting screw clockwise to increase the distance between the clutch lever and the handlebar.
Turn the adjusting screw counterclockwise to decrease the distance between the clutch lever and the handlebar.
The range of adjustment is limited.
Turn the adjusting screw by hand only, and do not apply any force.
Do not make any adjustments while riding!

Checking the fluid level of hydraulic clutch

Warning
Skin irritations Brake fluid can cause skin irritation on contact.

– Avoid contact with skin and eyes, and keep out of the reach of children.
– If brake fluid gets into your eyes, rinse thoroughly with water and contact a doctor immediately.

Info
The fluid level rises with increasing wear of the clutch lining disc.
Avoid contact between brake fluid and painted parts. Brake fluid attacks paint!
Use only clean brake fluid from a sealed container!

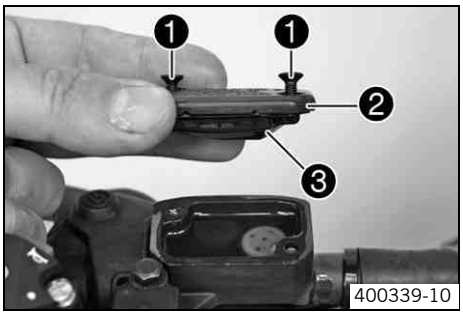

– Move the clutch fluid reservoir mounted on the handlebar to a horizontal position.
– Remove screws ❶.
– Remove cover ❷ with membrane ❸.
– Check the fluid level.

Fluid level under top level of container.	4 mm (0.16 in)

» If the level of the fluid does not meet specifications:
  – Correct the fluid level of the hydraulic clutch.

Brake fluid DOT 4 / DOT 5.1 (☛ p. 106)

– Position the cover with the membrane. Mount and tighten the screws.

Info
Clean up overflowed or spilt fluid immediately with water.

Changing the hydraulic clutch fluid 🔧

Warning
Skin irritations Brake fluid can cause skin irritation on contact.

– Avoid contact with skin and eyes, and keep out of the reach of children.
– If brake fluid gets into your eyes, rinse thoroughly with water and contact a doctor immediately.

Warning
Environmental hazard Problem materials cause environmental damage.

– Dispose of oil, grease, filters, fuel, cleaning substances, brake fluid, batteries, etc. according to regulations.

Info
The fluid level rises with increasing wear of the clutch lining disc.
Avoid contact between brake fluid and painted parts. Brake fluid attacks paint!
Use only clean brake fluid from a sealed container!

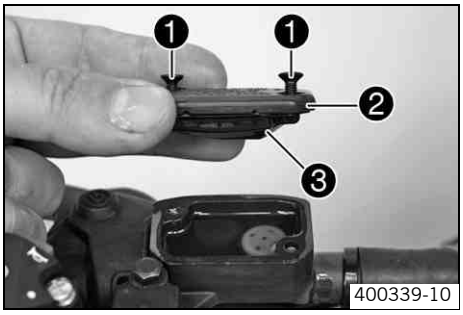

– Move the clutch fluid reservoir mounted on the handlebar to a horizontal position.
– Remove screws ❶.
– Remove cover ❷ with membrane ❸.

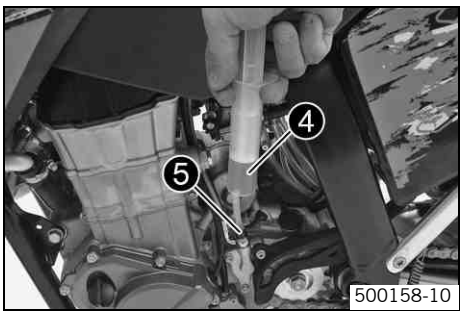

– Fill bleeding syringe ❹ with the appropriate hydraulic fluid.

Bleed syringe (50329050000)
Brake fluid DOT 4 / DOT 5.1 (☛ p. 106)

– On the slave cylinder, remove bleeder screw ❺ and mount bleeding syringe ❹.

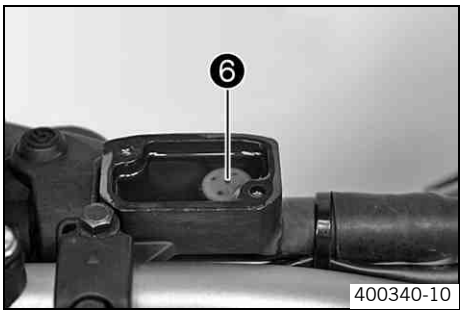

– Inject the liquid into the system until it escapes from bore hole ❻ of the master cylinder without bubbles.
– To prevent overflow, drain fluid occasionally from the master cylinder reservoir.
– Remove the bleeding syringe. Mount and tighten screws bleeder screw.
– Correct the fluid level of the hydraulic clutch.

Guideline

Fluid level under top level of container.	4 mm (0.16 in)

– Position the cover with the membrane. Mount and tighten the screws.

Info
Clean up overflowed or spilt fluid immediately with water.

Carburetor - idle

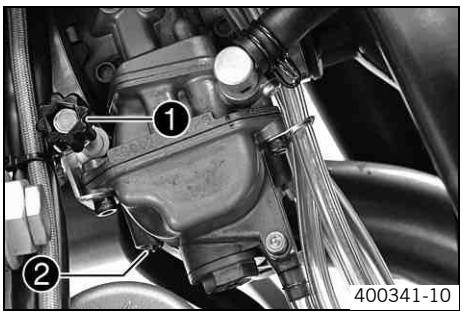

The idle setting of the carburetor has a big influence on the starting behavior, stable idling and the response to throttle opening. That means that an engine with a correctly set idle speed is easier to start than if the idle is set wrongly.

Info
The carburetor and its components are subject to increased wear caused by engine vibration. Wear can result in malfunctioning.

The idle speed is adjusted with the adjustment screw ❶.
The idle mixture is adjusted with the idle mixture adjustment screw ❷.

Carburetor - adjusting idle

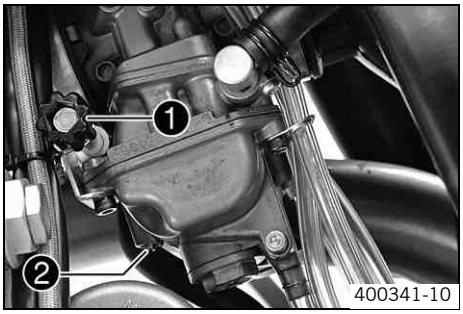

– Screw in the idle adjusting screw ❷ until it stops and then to the prescribed basic setting.

Guideline

Idle mixture adjusting screw (400 EXC)	
Open	0.75 turn
Idle mixture adjusting screw (530 EXC, 530 EXC SIX DAYS, 450 XC-W ZA, 530 XC-W ZA)	
Open	1.5 turns
Idle mixture adjusting screw (450 EXC, 450 EXC SIX DAYS, 400 XC-W USA, 450 XC-W USA)	
Open	1.75 turns
Idle mixture adjusting screw (530 XC-W USA)	
Open	2.0 turns

Adjustment tool for mixture control screw (77329034000)

– Run the engine until warm.

Guideline

Warm-up time	≥ 5 min

Danger

Danger of poisoning Exhaust gases are poisonous and can result in unconsciousness and/or death.

– When running the engine, always make sure there is sufficient ventilation, and do not start or run the engine in a closed space.

– Adjust the idle speed with adjusting screw ❶.

Guideline

Choke function deactivated – The choke lever is pushed in to the stop. (EXC AUS, XC-W) (☛ p. 20)	
Choke function deactivated – The choke lever is pushed back to the stop. (EXC EU, EXC SIX DAYS) (☛ p. 21)	
Idle speed	1,550… 1,650 rpm

– Turn the idle adjusting screw ❷ slowly until the idle speed begins to fall.
– Note the position and turn the idle adjusting screw slowly counterclockwise until the idle speed falls.
– Adjust to the point between these two positions with the highest idle speed.

Info

If there is a big engine speed rise, reduce the idle speed to a normal level and repeat the above steps.
The extreme sport motorcyclist will set the mixture about ¼ of a turn back from this ideal value (leaner, in a clockwise direction) since the engine becomes hotter in sporting use.
If the procedure described here does not lead to satisfactory results, the cause may be a wrongly dimensioned idling jet.
If you can turn the idle adjusting screw to the end without any change of engine speed, you have to mount a smaller idling jet.
The idle adjusting screw must not be opened more than two turns. If more than two turns are necessary (rich mixture), use a larger idling jet.
After changing the idling jet, start from the beginning with the adjusting steps.

– Adjust the idle speed with adjusting screw ❶.

Guideline

Choke function deactivated – The choke lever is pushed in to the stop. (EXC AUS, XC-W) (☛ p. 20)	
Choke function deactivated – The choke lever is pushed back to the stop. (EXC EU, EXC SIX DAYS) (☛ p. 21)	
Idle speed	1,550… 1,650 rpm

Info
Following extreme air temperature or altitude changes, adjust the idle speed again.

Emptying the carburetor float chamber

Danger
Fire hazard Fuel can easily catch fire.

– Never fill up the vehicle near open flames or burning cigarettes, and always switch off the engine first. Be careful that no fuel is spilt, especially on hot vehicle components. Clean up spilt fuel immediately.
– Fuel in the fuel tank expands when warm and can escape if the tank is overfilled. See specifications on filling up with fuel.

Warning
Danger of poisoning Fuel is poisonous and a health hazard.

– Avoid contact between fuel and skin, eyes and clothing. Do not inhale fuel vapors. If fuel gets into your eyes, rinse immediately with water and contact a doctor. Wash affected skin areas immediately with soap and water. If fuel is swallowed, contact a doctor immediately. Change clothing that has come into contact with fuel. Store fuel in a suitable canister according to regulations and keep it out of the reach of children.

Warning
Environmental hazard Improper handling of fuel is a danger to the environment.

– Do not allow fuel to get into the ground water, the ground, or the sewage system.

Info
Carry out this work with a cold engine.

– Turn handle ❶ of the fuel tap to the **OFF** position. (Figure 500137-10☛ p. 20)
✓ No more fuel flows from the tank to the carburetor.
– Direct the hose of the float chamber into a suitable container.

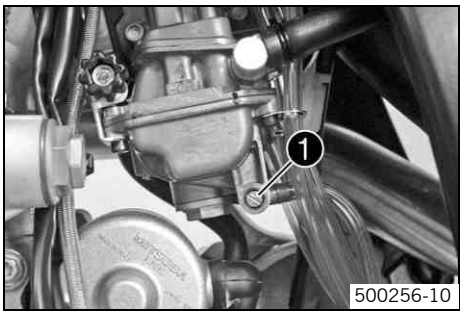

500256-10

Info
Water in the float chamber results in malfunctioning.

– Undo the screw ❶ (turn it counterclockwise) a few turns and drain the fuel from the float chamber.
– Tighten screw ❶.

Checking engine oil level

Info
The engine oil level must be checked when the engine is cold.

– Stand the motorcycle upright on a horizontal surface.

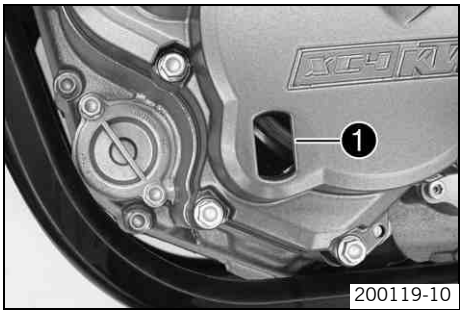

Condition

Engine is cold.

– Check the engine oil level.

The engine oil must be between the halfway mark and the top of the oil level viewer ❶.

» If the engine oil level is below the specified level:

– Top up the engine oil. (☛ p. 82)

Changing engine oil and oil filter, cleaning engine oil screen 🔧

– Drain the engine oil and clean the engine oil screen. 🔧 (☛ p. 80)
– Remove the oil filter. 🔧 (☛ p. 80)
– Mount the oil filter. 🔧 (☛ p. 81)
– Fill up with engine oil. 🔧 (☛ p. 81)

Draining engine oil, cleaning engine oil screen 🔧

Warning

Danger of scalding Engine oil and gear oil get very hot when the motocycle is driven.

– Wear suitable protective clothing and gloves. If you scald yourself, hold the affected area under cold water immediately.

Warning

Environmental hazard Problem materials cause environmental damage.

– Dispose of oil, grease, filters, fuel, cleaning substances, brake fluid, batteries, etc. according to regulations.

Info

Drain the engine oil only when the engine is warm.

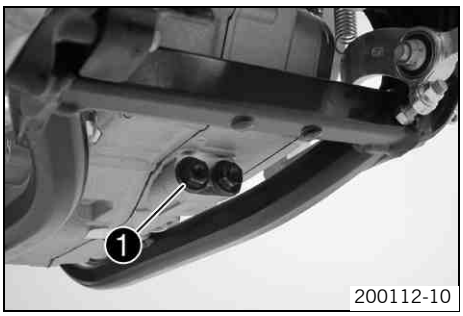

– Stand the motorcycle on its side stand on a horizontal surface.
– Place a suitable container under the engine.
– Remove engine oil plug screen ❶.
– Completely drain the engine oil.
– Thoroughly clean the plug and gear oil screen.
– Clean the sealing area on the engine.
– Mount and tighten the plug of engine oil screen ❶.

Guideline

Plug, engine oil screen	M17x1.5	20 Nm (14.8 lbf ft)

Removing the oil filter 🔧

Warning

Danger of scalding Engine oil and gear oil get very hot when the motocycle is driven.

– Wear suitable protective clothing and gloves. If you scald yourself, hold the affected area under cold water immediately.

Warning

Environmental hazard Problem materials cause environmental damage.

– Dispose of oil, grease, filters, fuel, cleaning substances, brake fluid, batteries, etc. according to regulations.

– Place a suitable container under the engine.

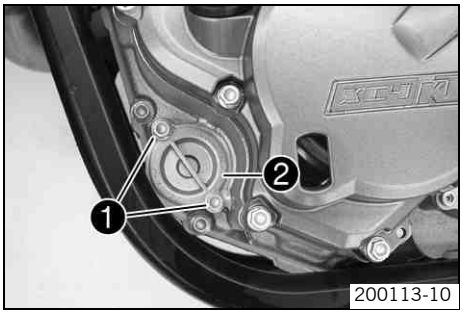

200113-10

– Remove screws ❶. Remove oil filter cover ❷ with O-ring.

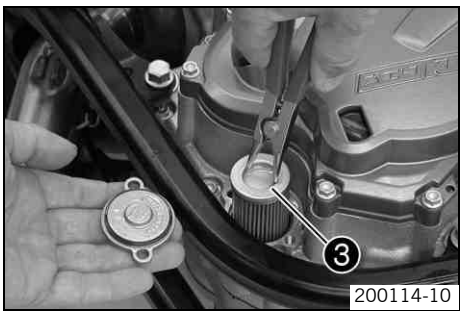

200114-10

– Pull the oil filter insert ❸ out of the oil filter casing.

Circlip pliers reverse (51012011000)

– Completely drain the engine oil.
– Thoroughly clean parts and sealing area.

Mounting oil filter 🔧

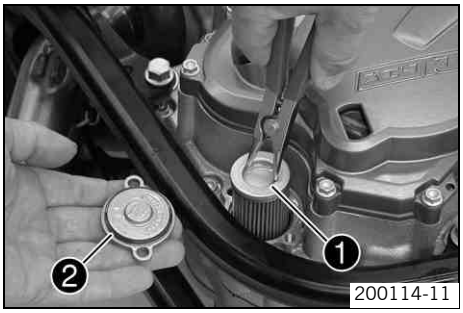

200114-11

– Lay the motorcycle on its side and fill the oil filter housing to about ⅓ full with engine oil.
– Fill the oil filter ❶ with engine oil and place it in the oil filter container.
– Lubricate the O-ring ❷ of the oil filter cover.

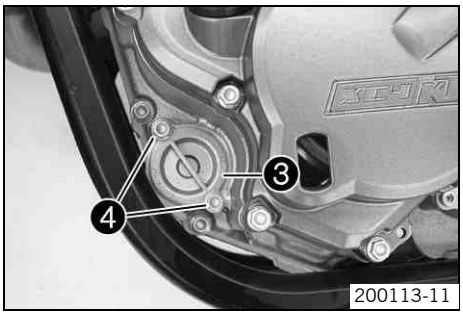

200113-11

– Refit the oil filter cover ❸.
– Mount and tighten screws ❹.

Guideline

Screw, oil filter cover	M6	10 Nm (7.4 lbf ft)

– Stand the motorcycle up.

Filling up with engine oil 🔧

Info
Too little engine oil or poor-quality engine oil results in premature wear to the engine.

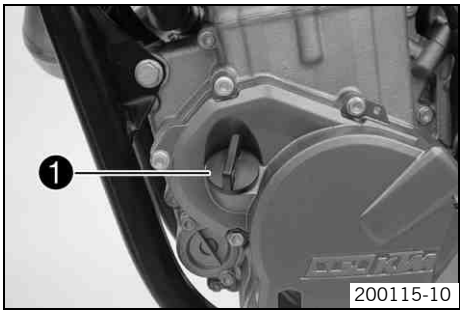

200115-10

– Remove the screw cap ❶ on the generator cover and fill up with engine oil.

Engine oil	0.60 l (0.63 qt.)	Engine oil (SAE 10W/50) (☛ p. 106)

– Mount and tighten screw cap ❶.

Danger
Danger of poisoning Exhaust gases are poisonous and can result in unconsciousness and/or death.

– When running the engine, always make sure there is sufficient ventilation, and do not start or run the engine in a closed space.

– Start the engine and check that it is oil-tight.
– Check the engine oil level. (☛ p. 79)

Topping up engine oil

Info
Too little engine oil or poor-quality engine oil results in premature wear to the engine.

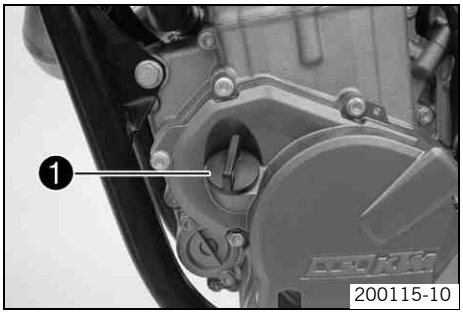

– Remove the screw cap ❶ on the generator cover and fill up with engine oil.

Engine oil (SAE 10W/50) (☛ p. 106)

– Mount and tighten screw cap ❶.

Danger
Danger of poisoning Exhaust gases are poisonous and can result in unconsciousness and/or death.

– When running the engine, always make sure there is sufficient ventilation, and do not start or run the engine in a closed space.

– Start the engine and check that it is oil-tight.
– Check the engine oil level. (☛ p. 79)

Checking gear oil level

Info
The gear oil level must be checked when the engine is cold.

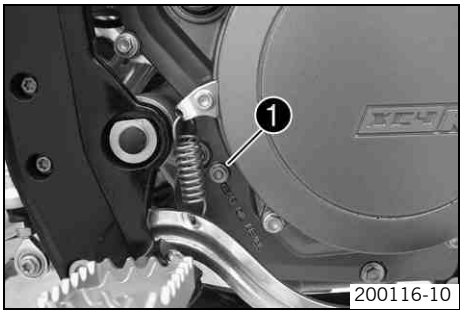

– Stand the motorcycle upright on a horizontal surface.

Condition
Engine is cold.

– Remove gear oil level check screw ❶. Stand the vehicle upright.
– Check the gear oil level.

A small amount of gear oil should flow out.

» If no gear oil flows out:
– Add gear oil. 🔧 (☛ p. 83)

– Mount and tighten the gear oil level check screw.
Guideline

Screw, gear oil level check	M6	8 Nm (5.9 lbf ft)

Changing gear oil, cleaning gear oil screen 🔧

– Drain the gear oil and clean the gear oil screen. 🔧 (☛ p. 82)
– Fill up with gear oil. 🔧 (☛ p. 83)

Draining gear oil, cleaning gear oil screen 🔧

Warning
Danger of scalding Engine oil and gear oil get very hot when the motocycle is driven.

– Wear suitable protective clothing and gloves. If you scald yourself, hold the affected area under cold water immediately.

Warning
Environmental hazard Problem materials cause environmental damage.

– Dispose of oil, grease, filters, fuel, cleaning substances, brake fluid, batteries, etc. according to regulations.

Info
Drain the gear oil only when the engine is warm.

– Stand the motorcycle on its side stand on a horizontal surface.

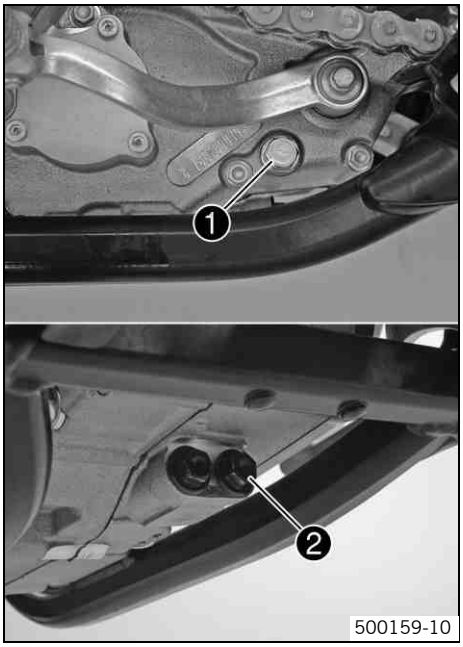

- Place a suitable container under the engine.
- Remove the gear oil drain plug ❶.
- Plug - remove the gear oil screen ❷.
- Completely drain the gear oil.
- Thoroughly clean the gear oil drain plug with a magnet.
- Thoroughly clean the drain plug and gear oil screen with a magnet.
- Clean the sealing area on the engine.
- Mount and tighten gear oil drain plug ❶ with the seal ring.

  Guideline

Gear oil drain plug with magnet	M12x1.5	20 Nm (14.8 lbf ft)

- Mount and tighten the plug of gear oil screen ❷.

  Guideline

Plug, gear oil screen	M16x1.5	20 Nm (14.8 lbf ft)

Filling up with gear oil

Info
Too little gear oil or poor-quality oil results in premature wear to the transmission.

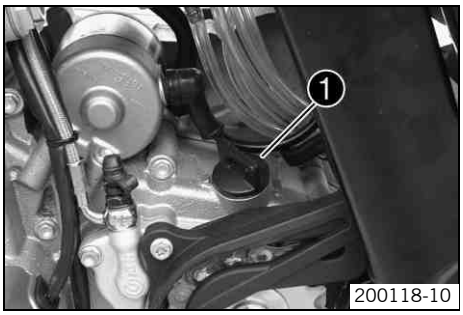

- Remove the screw cap ❶ and fill up with gear oil.

Gear oil	0.90 l (0.95 qt.)	Engine oil (SAE 10W/50) (☛ p. 106)

- Mount and tighten screw cap ❶.

Danger
Danger of poisoning Exhaust gases are poisonous and can result in unconsciousness and/or death.

  - When running the engine, always make sure there is sufficient ventilation, and do not start or run the engine in a closed space.

- Start the engine and check that it is oil-tight.
- Check the gear oil level. (☛ p. 82)

Adding gear oil

Info
Too little gear oil or poor-quality oil results in premature wear to the transmission.

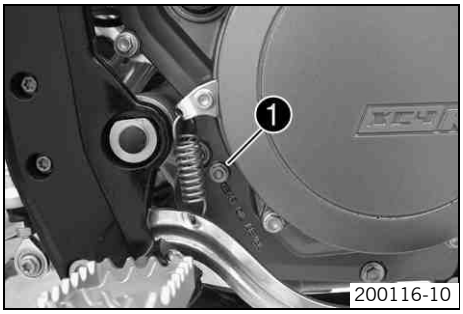

- Remove gear oil level check screw ❶.

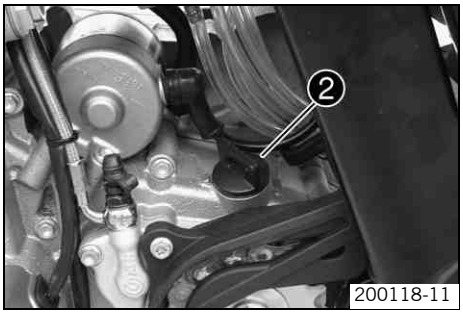

– Remove screw cap ❷. Stand the vehicle upright.
– Add gear oil until it flows out of the bore of the gear oil level screw.

Engine oil (SAE 10W/50) (☛ p. 106)

– Mount and tighten the gear oil level check screw.

Guideline

Screw, gear oil level check	M6	8 Nm (5.9 lbf ft)

– Mount and tighten screw cap ❷.

Danger

Danger of poisoning Exhaust gases are poisonous and can result in unconsciousness and/or death.

– When running the engine, always make sure there is sufficient ventilation, and do not start or run the engine in a closed space.

– Start the engine and check that it is oil-tight.

Faults	Possible cause	Action
The engine cannot be cranked (electric starter).	Operating error	– Go through the steps of starting the engine. (☛ p. 26)
	Battery discharged	– Recharge the battery. 🔧 (☛ p. 68) – Check the charging voltage. 🔧 – Check the closed current. 🔧 – Check the generator. 🔧
	Fuse blown	– Remove the fuse. (☛ p. 69) – Install the fuse. (☛ p. 69)
	Starter relay defective	– Check the starter relay. 🔧
	Starter motor defective	– Check the starter motor. 🔧
Engine turns but does not start.	Operating error	– Go through the steps of starting the engine. (☛ p. 26)
	Motorcycle was out of use for a long time and there is old fuel in the float chamber	– Empty the carburetor float chamber. 🔧 (☛ p. 79)
	Fuel feed interrupted	– Check the fuel tank breather. – Clean the fuel tap. – Check/adjust the carburetor components. 🔧
	Engine flooded	– Clean and dry the spark plug or replace if necessary.
	Spark plug oily or wet	– Clean and dry the spark plug or replace if necessary.
	Electrode distance (plug gap) of spark plug too wide	– Adjust plug gap. Guideline Spark plug electrode gap 0.9 mm (0.035 in)
	Defect in ignition system	– Check the ignition system. 🔧
	Short-circuit cable in cable harness frayed, short-circuit button or emergency OFF switch defective	– Check the wiring harness (visual check). – Check the electrical system.
	Plug connector of CDI control device, pulse generator or ignition coil oxidized.	– Clean the plug connector and treat it with contact spray.
	Water in carburetor or jets blocked	– Check/adjust the carburetor components. 🔧
Engine has no idle.	Idling jet blocked	– Check/adjust the carburetor components. 🔧
	Adjusting screws on carburetor distorted	– Carburetor - adjust the idle speed. 🔧 (☛ p. 78)
	Spark plug defective	– Change spark plug.
	Ignition system defective	– Check the ignition coil. 🔧 – Check the CDI unit. 🔧 – Check the spark plug connector. 🔧 – Check the ignition pulse generator. 🔧 – Check the generator. 🔧
Engine does not speed up.	Carburetor running over because float needle dirty or worn.	– Check/adjust the carburetor components. 🔧
	Loose carburetor jets	– Check/adjust the carburetor components. 🔧
	Ignition system defective	– Check the ignition coil. 🔧 – Check the CDI unit. 🔧 – Check the spark plug connector. 🔧 – Check the ignition pulse generator. 🔧 – Check the generator. 🔧

Faults	Possible cause	Action
Engine has too little power.	Fuel feed interrupted	– Check the fuel tank breather. – Clean the fuel tap. – Check/adjust the carburetor components.
	Air filter very dirty	– Clean the air filter. (☛ p. 75)
	Exhaust system leaky, deformed or too little glass fiber yarn filling in main silencer	– Check exhaust system for damage. – Change glass fiber yarn filling of main silencer.
	Valve clearance too little	– Adjust the valve clearance.
	Ignition system defective	– Check the ignition coil. – Check the CDI unit. – Check the spark plug connector. – Check the ignition pulse generator. – Check the generator.
Engine stalls or is popping into the carburetor	Lack of fuel	– Turn handle ❶ of the fuel tap to the **ON** position. (Figure 500137-10☛ p. 20) – Fill up with fuel. (☛ p. 28)
	Engine takes in bad air	– Check rubber sleeves and carburetor for tightness.
Engine overheats.	Too little coolant in cooling system	– Check the cooling system for leakage. – Check the coolant level. (☛ p. 72)
	Too little air stream	– Switch off engine when standing.
	Radiator fins very dirty	– Clean radiator fins.
	Foam formation in cooling system	– Drain the coolant. (☛ p. 73) – Refill the coolant. (☛ p. 73)
	Bent radiator hose	– Change the radiator hose.
	Thermostat defective	– Check the thermostat. Guideline Opening temperature: 70 °C (158 °F)
	Defect in radiator fan system (EXC SIX DAYS, XC-W ZA)	– Check the radiator fan fuse. – Check the radiator fan. – Check the thermostat.
High oil consumption	Engine vent hose bent	– Route the vent hose without bends or replace it if necessary.
	Engine oil level too high	– Check the engine oil level. (☛ p. 79)
	Engine oil too thin (low viscosity)	– Change the engine oil and oil filter and clean the engine oil screen. (☛ p. 80)
	Piston or cylinder is worn	– Piston/cylinder - determine the mounting clearance
Battery discharged	The battery does not charge	– Check the charging voltage. – Check the charging current. – Check the generator.
	Undesired power consumer	– Check the closed current.
Speedometer values deleted (time, stop watch, lap times)	The battery in the speedometer is empty.	– Change the battery in the speedometer.

Cleaning motorcycle

Note

Material damage Damage and destruction of components by high-pressure cleaning equipment.

– Never clean the vehicle with high-pressure cleaning equipment or a strong water-jet. The excessive pressure can penetrate electrical components, connects, Bowden cables, and bearings, etc., and can damage or destroy these parts.

Warning

Environmental hazard Problem materials cause environmental damage.

– Dispose of oil, grease, filters, fuel, cleaning substances, brake fluid, batteries, etc. according to regulations.

Info

If you clean the motorcycle regularly, its value and appearance are maintained over a long period.
Avoid direct sunshine on the motorcycle during cleaning.

– Before you clean the motocycle, seal the exhaust system to prevent penetration by water.
– First remove coarse dirt particles with a gentle water spray.
– Spray very dirty areas with a normal motorcycle cleaner and then clean with a paintbrush.

Motorcycle cleaner (☛ p. 107)

Info

Use warm water containing normal motorcycle cleaner and a soft sponge.

– After rinsing the motorcycle with a gentle water spray, allow it to dry thoroughly.
– Empty the carburetor float chamber. 🔧 (☛ p. 79)

Warning

Danger of accidents Reduced braking due to wet or dirty brakes.

– Clean or dry dirty or wet brakes by riding and braking gently.

– After cleaning, ride the vehicle a short distance until the engine warms up, and then apply the brakes.

Info

The heat produced causes water at inaccessible positions in the engine and the brakes to evaporate.

– Push back the protection covers on the handlebar instruments to allow water to evaporate.
– After the motorcycle has cooled off, oil or grease all moving parts and bearings.
– Clean the chain. (☛ p. 51)
– Treat bare metal parts (except for brake discs and exhaust system) with anti-corrosion materials.

Cleaning and polishing materials for metal, rubber and plastic (☛ p. 107)

– Treat all painted parts with a mild paint polish.

High-luster polish for paint (☛ p. 107)

– To prevent electrical problems, treat electric contacts and switches with contact spray.

Contact spray (☛ p. 107)

(all EXC models)

– Lubricate the steering lock.

Universal oil spray (☛ p. 108)

Storage

Warning

Danger of poisoning Fuel is poisonous and a health hazard.

– Avoid contact between fuel and skin, eyes and clothing. Do not inhale fuel vapors. If fuel gets into your eyes, rinse immediately with water and contact a doctor. Wash affected skin areas immediately with soap and water. If fuel is swallowed, contact a doctor immediately. Change clothing that has come into contact with fuel. Store fuel in a suitable canister according to regulations and keep it out of the reach of children.

Info

If you want to garage the motorcycle for a longer period, take the following actions.
Before storing the motorcycle, check all parts for function and wear. If service, repairs or replacements are necessary, you should do this during the storage period (less workshop overload). In this way, you can avoid long workshop waiting times at the start of the new season.

– Clean the motorcycle. (☛ p. 87)
– Change the engine oil and oil filter and clean the engine oil screen. 🔧 (☛ p. 80)
– Change the gear oil and clean the gear oil screen. 🔧 (☛ p. 82)
– Check the antifreeze and coolant level. (☛ p. 72)
– Drain the fuel from the tanks into a suitable container.
– Empty the carburetor float chamber. 🔧 (☛ p. 79)
– Check the tire air pressure. (☛ p. 67)
– Remove the battery. 🔧 (☛ p. 67)
– Recharge the battery. 🔧 (☛ p. 68)

Guideline

Storage temperature of battery without direct sunshine.	0… 35 °C (32… 95 °F)

– The storage place should be dry and not subject to large temperature differences.

Info

KTM recommends propping up the motorcycle.

– Jack up the motorcycle. (☛ p. 33)
– Cover the motorcycle with a porous sheet or blanket. Do not use non-porous materials since they prevent humidity from escaping, thus causing corrosion.

Info

Avoid running the engine for a short time only. Since the engine cannot warm up properly, the water vapor produced during combustion condenses and causes valves and exhaust system to rust.

Putting into operation after storage

– Remove the motorcycle from the work stand. (☛ p. 33)
– Install the battery. 🔧 (☛ p. 68)
– Fill up with fuel. (☛ p. 28)
– Checks before putting into operation (☛ p. 26)
– Make a test ride.

Design	1-cylinder 4-stroke engine, water-cooled
Displacement (all 400 models)	393.4 cm³ (24.007 cu in)
Displacement (all 450 models)	449.3 cm³ (27.418 cu in)
Displacement (all 530 models)	510.4 cm³ (31.147 cu in)
Stroke (all 400 models)	55.5 mm (2.185 in)
Stroke (all 450 models)	63.4 mm (2.496 in)
Stroke (all 530 models)	72 mm (2.83 in)
Bore	95 mm (3.74 in)
Compression ratio (all 400 models)	11.1:1
Compression ratio (all 450/530 models)	11.9:1
Idle speed	1,550... 1,650 rpm
Control	OHC, 4 valves controlled via rocker arm, drive via tooth/wheel chain
Valve diameter, intake	39.5 mm (1.555 in)
Valve diameter, exhaust	31.7 mm (1.248 in)
Valve clearance	
Outfeed at: 20 °C (68 °F)	0.12... 0.17 mm (0.0047... 0.0067 in)
Infeed at: 20 °C (68 °F)	0.10... 0.15 mm (0.0039... 0.0059 in)
Crankshaft bearing	2 grooved ball bearings
Conrod bearing	Needle bearing
Piston pin bearing	not a bearing bush - DLC-plated piston pins
Pistons	Forged light alloy
Piston rings	1 compression ring, 1 oil scraper ring
Engine lubrication	Pressure circulation lubrication with 2 rotor pumps (engine) / 1 rotor pump (transmission)
Primary transmission	33:76
Clutch	Multidisc clutch in oil bath / hydraulically activated
Transmission ratio	
1st gear	14:36
2nd gear	17:32
3rd gear	19:28
4th gear	22:26
5th gear	24:23
6th gear	26:21
Generator	12 V, 150 W
Ignition	Contactless controlled fully electronic ignition with digital ignition adjustment, type Kokusan
Spark plug	NGK LKAR 8AI - 9
Spark plug electrode gap	0.9 mm (0.035 in)
Cooling	Water cooling, permanent circulation of coolant by water pump
Starting aid	Electric starter / kickstarter

Capacity- engine oil

Engine oil	0.60 l (0.63 qt.)	Engine oil (SAE 10W/50) (☛ p. 106)

Capacity - gear oil

Gear oil	0.90 l (0.95 qt.)	Engine oil (SAE 10W/50) (☛ p. 106)

Capacity - coolant

Coolant	0.95 l (1 qt.)	Coolant (☛ p. 106)
		Coolant (mixed ready to use) (☛ p. 106)

Screw, cable holder in generator cover	M4	4 Nm (3 lbf ft)	**Loctite® 243™**
Oil jet, rocker arm lubrication	M5	2 Nm (1.5 lbf ft)	**Loctite® 243™**
Oil jet, piston cooling	M5	2 Nm (1.5 lbf ft)	**Loctite® 243™**
Screw, locking lever	M5	6 Nm (4.4 lbf ft)	**Loctite® 243™**
Screw, ignition pulse generator	M5	6 Nm (4.4 lbf ft)	**Loctite® 243™**
Locking screw for bearing	M5	6 Nm (4.4 lbf ft)	**Loctite® 243™**
Screw, oil pump cover	M5	6 Nm (4.4 lbf ft)	**Loctite® 222**
Oil jet, conrod lubrication	M6x0.75	4 Nm (3 lbf ft)	–
Bleeding connection, transmission	M6	4 Nm (3 lbf ft)	**Loctite® 243™**
Nut, water-pump wheel	M6	8 Nm (5.9 lbf ft)	**Loctite® 243™**
Screw, kickstarter stop	M6	10 Nm (7.4 lbf ft)	**Loctite® 243™**
Screw, timing chain securing guide	M6	8 Nm (5.9 lbf ft)	**Loctite® 243™**
Screw, exhaust flange	M6	10 Nm (7.4 lbf ft)	–
Screw, torque governor	M6	10 Nm (7.4 lbf ft)	**Loctite® 243™**
Screw, starter motor	M6	10 Nm (7.4 lbf ft)	–
Screw, kickstarter spring hanger	M6	10 Nm (7.4 lbf ft)	–
Screw, timing chain guide rail	M6	8 Nm (5.9 lbf ft)	**Loctite® 243™**
Screw generator cover	M6x25	10 Nm (7.4 lbf ft)	–
Screw generator cover	M6x40	10 Nm (7.4 lbf ft)	–
Screw, gear oil level check	M6	8 Nm (5.9 lbf ft)	–
Screw, clutch cover	M6x25	10 Nm (7.4 lbf ft)	–
Screw, clutch cover	M6x30	10 Nm (7.4 lbf ft)	–
Screw, clutch spring	M6	10 Nm (7.4 lbf ft)	–
Screw, engine housing	M6x60	10 Nm (7.4 lbf ft)	–
Screw, engine housing	M6x75	10 Nm (7.4 lbf ft)	–
Screw, camshaft bearing support	M6	10 Nm (7.4 lbf ft)	**Loctite® 243™**
Screw, oil filter cover	M6	10 Nm (7.4 lbf ft)	–
Screw, shift drum locating	M6	10 Nm (7.4 lbf ft)	**Loctite® 243™**
Screw, shift lever	M6	10 Nm (7.4 lbf ft)	**Loctite® 243™**
Screw, timing chain tensioning rail	M6	8 Nm (5.9 lbf ft)	**Loctite® 243™**
Screw, stator bracket	M6	10 Nm (7.4 lbf ft)	**Loctite® 243™**
Plug, vacuum connection	M6	5 Nm (3.7 lbf ft)	**Loctite® 243™**
Screw, valve cover	M6	10 Nm (7.4 lbf ft)	–
Screw, water pump cover	M6x25	10 Nm (7.4 lbf ft)	–
Screw, water pump cover	M6x55	10 Nm (7.4 lbf ft)	–
Screw, idler	M6	10 Nm (7.4 lbf ft)	**Loctite® 243™**
Screw, cylinder head	M6	10 Nm (7.4 lbf ft)	–
Screw, rocker arm bearing	M7x1	15 Nm (11.1 lbf ft)	–
Plug, oil channel	M7	9 Nm (6.6 lbf ft)	**Loctite® 243™**
Screw, kickstarter	M8	25 Nm (18.4 lbf ft)	**Loctite® 243™**
Plug, crankshaft location	M8	10 Nm (7.4 lbf ft)	–
Balancer shaft nut	M10x1	40 Nm (29.5 lbf ft)	–
Screw, unlocking of timing chain tensioner	M10x1	10 Nm (7.4 lbf ft)	–
Screw, engine sprocket	M10	60 Nm (44.3 lbf ft)	**Loctite® 243™**
Plug, oil channel	M10	15 Nm (11.1 lbf ft)	**Loctite® 243™**

Screw, cylinder head	M10x1.25	Tightening sequence: Tighten diagonally, beginning with the rear screw on the chain shaft. Step 1 10 Nm (7.4 lbf ft) Step 2 30 Nm (22.1 lbf ft) Step 3 50 Nm (36.9 lbf ft)	lubricated with engine oil
Nut, rotor	M12x1	60 Nm (44.3 lbf ft)	–
Spark plug	M12x1.25	15... 20 Nm (11.1... 14.8 lbf ft)	–
Gear oil drain plug with magnet	M12x1.5	20 Nm (14.8 lbf ft)	–
Plug, SLS	M12x1.5	20 Nm (14.8 lbf ft)	–
Oil pressure control valve plug	M12x1.5	20 Nm (14.8 lbf ft)	–
Plug, rocker arm	M14x1.25	20 Nm (14.8 lbf ft)	–
Plug, gear oil screen	M16x1.5	20 Nm (14.8 lbf ft)	–
Plug, engine oil screen	M17x1.5	20 Nm (14.8 lbf ft)	–
Nut, inner clutch hub	M18x1.5	80 Nm (59 lbf ft)	–
Nut, primary gear	M20LHx1.5	100 Nm (73.8 lbf ft)	**Loctite® 243™**
Plug, timing chain tensioner	M24x1.5	30 Nm (22.1 lbf ft)	–

400 EXC

Carburetor type	KEIHIN FCR-MX 39
Carburetor identification number	3900N
Needle position	5th position from top
Idle mixture adjusting screw	
Open	0.75 turn
Pump membrane stop	2.15 mm (0.0846 in)
Main jet	180
Jet needle	OBDYU (OBDTQ)
Idling jet	42
Idle air jet	100
Cold start jet	65 (85)
Leakage nozzle	40
Slide stop	present

400 XC-W USA

Carburetor type	KEIHIN FCR-MX 39
Carburetor identification number	3900W
Needle position	1st position from top
Idle mixture adjusting screw	
Open	1.75 turns
Pump membrane stop	2.15 mm (0.0846 in)
Main jet	180
Jet needle	OBDTQ
Idling jet	42
Idle air jet	100
Cold start jet	85
Leakage nozzle	40

450 EXC, 450 EXC SIX DAYS

Carburetor type	KEIHIN FCR-MX 39
Carburetor identification number	3900I
Needle position	4th position from top
Idle mixture adjusting screw	
Open	1.75 turns
Pump membrane stop	2.15 mm (0.0846 in)
Main jet	180
Jet needle	OBDYU (OBDTQ)
Idling jet	40
Idle air jet	100
Cold start jet	65 (85)
Leakage nozzle	40
Slide stop	present

450 XC-W

Carburetor type	KEIHIN FCR-MX 39
Carburetor identfication number	3900L
Needle position (450 XC-W USA)	1st position from top
Needle position (450 XC-W ZA)	4th position from top
Idle mixture adjusting screw (450 XC-W ZA)	
Open	1.5 turns
Idle mixture adjusting screw (450 XC-W USA)	
Open	1.75 turns
Pump membrane stop	2.15 mm (0.0846 in)
Main jet (450 XC-W USA)	180
Main jet (450 XC-W ZA)	185
Jet needle	OBDTQ
Idling jet	40
Idle air jet	100
Cold start jet	85
Leakage nozzle	40

530 EXC, 530 EXC SIX DAYS

Carburetor type	KEIHIN FCR-MX 39
Carburetor identfication number	3900J
Needle position	5th position from top
Idle mixture adjusting screw	
Open	1.5 turns
Pump membrane stop	2.15 mm (0.0846 in)
Main jet	180
Jet needle	OBDZT (OBDTR)
Idling jet	40
Idle air jet	100
Cold start jet	65 (85)
Leakage nozzle	40
Slide stop	present

530 XC-W

Carburetor type	KEIHIN FCR-MX 39
Carburetor identfication number	3900M
Needle position (530 XC-W USA)	1st position from top
Needle position (530 XC-W ZA)	4th position from top
Idle mixture adjusting screw (530 XC-W ZA)	
Open	1.5 turns
Idle mixture adjusting screw (530 XC-W USA)	
Open	2.0 turns
Pump membrane stop	2.15 mm (0.0846 in)
Main jet (530 XC-W USA)	180
Main jet (530 XC-W ZA)	185
Jet needle	OBDTR
Idling jet	40
Idle air jet	100
Cold start jet	85
Leakage nozzle	40

Frame	Central tube frame made of chrome molybdenum steel tubing
Fork	**WP Suspension** 4860 MXMA PA
Suspension travel	
Front	300 mm (11.81 in)
Rear	335 mm (13.19 in)
Fork offset (EXC SIX DAYS, XC-W USA)	19 mm (0.75 in)
Fork offset (EXC EU, EXC AUS, XC-W ZA)	20 mm (0.79 in)
Shock absorber	**WP Suspension** PDS 5018 DCC
Brake system	Disc brakes, brake calipers on floating bearings
Diameter of brake discs	
Front	260 mm (10.24 in)
Rear	220 mm (8.66 in)
Wear limit of brake discs	
Front	2.5 mm (0.098 in)
Rear	3.5 mm (0.138 in)
Tire air pressure off road	
Front	1.0 bar (15 psi)
Rear	1.0 bar (15 psi)
Road tire pressure (all EXC models)	
front	1.5 bar (22 psi)
Rear	2.0 bar (29 psi)
Final drive (400 EXC, 450 EXC, 450 EXC SIX DAYS)	15:45 (13:52)
Final drive (400 XC-W, 450 XC-W)	13:52
Final drive (530 XC-W)	14:52
Final drive (530 EXC, 530 EXC SIX DAYS)	15:45 (14:52)
Chain	5/8 x 1/4"
Rear sprockets available	38, 40, 42, 45, 48, 49, 50, 51, 52
Steering head angle	63.5°
Wheelbase	1,475±10 mm (58.07±0.39 in)
Seat height unloaded	985 mm (38.78 in)
Ground clearance unloaded	380 mm (14.96 in)
Weight without fuel, approx. (all EXC models)	113.9 kg (251.1 lb.)
Weight without fuel, approx. (XC-W USA)	112.2 kg (247.4 lb.)
Weight without fuel, approx. (XC-W ZA)	113 kg (249 lb.)
Maximum permissible front axle load	145 kg (320 lb.)
Maximum permissible rear axle load	190 kg (419 lb.)
Maximum permissible overall weight	335 kg (739 lb.)

4Ah battery	YTX5L-BS	Battery voltage: 12 V Nominal capacity: 4 Ah maintenance-free

Lighting equipment

Headlight (EXC, EXC SIX DAYS, XC-W ZA)	BA20d	12 V 35/35 W
Parking light (EXC, EXC SIX DAYS, XC-W ZA)	W2,1x9,5d	12 V 5 W
Indicator lights (all EXC models)	W2x4,6d	12 V 1.2 W
Flasher light (all EXC models)	BA15s	12 V 10 W
Brake / tail light (EXC, EXC SIX DAYS, XC-W ZA)	LED	

Licence plate lamp (all EXC models)	W2,1x9,5d	12 V 5 W

Tires

Validity	Front tire	Rear tire
(all EXC models)	**90/90 - 21 M/C 54M M+S TT** Metzeler MCE 6 DAYS EXTREME	**140/80 - 18 M/C 70M M+S TT** Metzeler MCE 6 DAYS EXTREME
(all XC-W models)	**80/100 - 21 51M TT** Bridgestone M59	**110/100 - 18 64M TT** Bridgestone M402
For further information, see the Service section under: http://www.ktm.com		

Capacity - fuel

Total fuel tank capacity, approx. (EXC, EXC SIX DAYS, XC-W ZA)	9.0 l (2.38 US gal)	Super unleaded (ROZ 95 / RON 95 / PON 91) (☛ p. 106)
Total fuel tank capacity, approx. (XC-W USA)	9.2 l (2.43 US gal)	Super unleaded (ROZ 95 / RON 95 / PON 91) (☛ p. 106)

Fuel reserve, approx.	2 l (2 qt.)

Fork part number	14.18.7E.06
Fork	**WP Suspension** 4860 MXMA PA
Compression damping	
Comfort	26 clicks
Standard	22 clicks
Sport	20 clicks
Rebound damping	
Comfort	24 clicks
Standard	22 clicks
Sport	22 clicks
Spring length with preload spacer(s)	510 mm (20.08 in)
Spring rate	
Weight of rider: 65... 75 kg (143... 165 lb.)	4.4 N/mm (25.1 lb/in)
Weight of rider: 75... 85 kg (165... 187 lb.)	4.6 N/mm (26.3 lb/in)
Weight of rider: 85... 95 kg (187... 209 lb.)	4.8 N/mm (27.4 lb/in)
Air chamber length	110^{+20}_{-30} mm ($4.33^{+0.79}_{-1.18}$ in)
Spring preload - **Preload Adjuster**	
Comfort	2 turns
Standard	2 turns
Sport	4 turns
Fork length	940 mm (37.01 in)

FORK OIL	Fork oil (SAE 5) (☛ p. 106)

Shock absorber part number	12.18.7E.06
Shock absorber	**WP Suspension** PDS 5018 DCC
Compression damping, low-speed	
Comfort	18 clicks
Standard	15 clicks
Sport	12 clicks
Compression damping, high-speed	
Comfort	2 turns
Standard	1.5 turns
Sport	1 turn
Rebound damping	
Comfort	26 clicks
Standard	24 clicks
Sport	22 clicks
Spring preload	9 mm (0.35 in)
Spring rate	
Weight of rider: 65… 75 kg (143… 165 lb.)	69 N/mm (394 lb/in)
Weight of rider: 75… 85 kg (165… 187 lb.)	72 N/mm (411 lb/in)
Weight of rider: 85… 95 kg (187… 209 lb.)	76 N/mm (434 lb/in)
Spring length	250 mm (9.84 in)
Gas pressure	10 bar (145 psi)
Static sag	35 mm (1.38 in)
Riding sag	105 mm (4.13 in)
Fitted length	411 mm (16.18 in)

Spoke nipple, front wheel	M4,5	5 Nm (3.7 lbf ft)	–
Spoke nipple, rear wheel	M5	5 Nm (3.7 lbf ft)	–
Screw, spoiler on fuel tank (XC-W USA)	M5x12	1.5 Nm (1.11 lbf ft)	–
Remaining nuts, chassis	M6	15 Nm (11.1 lbf ft)	–
Remaining screws, chassis	M6	10 Nm (7.4 lbf ft)	–
Screw, rear brake disc	M6	14 Nm (10.3 lbf ft)	–
Screw, front brake disc	M6	14 Nm (10.3 lbf ft)	–
Screw, shock absorber adjusting ring	M6	5 Nm (3.7 lbf ft)	–
Screw, ball joint of push rod on foot-brake cylinder	M6	10 Nm (7.4 lbf ft)	–
Nut, rear sprocket screw	M8	35 Nm (25.8 lbf ft)	**Loctite® 243™**
Nut, rim lock	M8	10 Nm (7.4 lbf ft)	–
Remaining nuts, chassis	M8	30 Nm (22.1 lbf ft)	–
Remaining screws, chassis	M8	25 Nm (18.4 lbf ft)	–
Screw, front brake caliper	M8	25 Nm (18.4 lbf ft)	**Loctite® 243™**
Screw, top triple clamp (EXC SIX DAYS, XC-W USA)	M8	17 Nm (12.5 lbf ft)	–
Screw, top triple clamp (EXC EU, EXC AUS, XC-W ZA)	M8	20 Nm (14.8 lbf ft)	–
Screw, bottom triple clamp (EXC SIX DAYS, XC-W USA)	M8	12 Nm (8.9 lbf ft)	–
Screw, bottom triple clamp (EXC EU, EXC AUS, XC-W ZA)	M8	15 Nm (11.1 lbf ft)	–
Screw, fork stub	M8	15 Nm (11.1 lbf ft)	–
Screw, top steering stem (EXC SIX DAYS, XC-W USA)	M8	17 Nm (12.5 lbf ft)	**Loctite® 243™**
Screw, top steering stem (EXC EU, EXC AUS, XC-W ZA)	M8	20 Nm (14.8 lbf ft)	–
Screw, handlebar clamp (EXC EU, EXC AUS, XC-W)	M8	20 Nm (14.8 lbf ft)	–
Screw, handlebar clamp (EXC SIX DAYS)	M8	16 Nm (11.8 lbf ft)	–
Screw, engine brace	M8	33 Nm (24.3 lbf ft)	–
Screw, subframe	M8	35 Nm (25.8 lbf ft)	**Loctite® 243™**
Screw, side stand fixing	M8	40 Nm (29.5 lbf ft)	**Loctite® 243™**
Engine carrying screw	M10	60 Nm (44.3 lbf ft)	–
Remaining nuts, chassis	M10	50 Nm (36.9 lbf ft)	–
Remaining screws, chassis	M10	45 Nm (33.2 lbf ft)	–
Screw, handlebar support	M10	40 Nm (29.5 lbf ft)	**Loctite® 243™**
Nut, seat fixing	M12x1	20 Nm (14.8 lbf ft)	–
Screw, top shock absorber	M12	80 Nm (59 lbf ft)	**Loctite® 243™**
Screw, bottom shock absorber	M12	80 Nm (59 lbf ft)	**Loctite® 243™**
Nut, swingarm pivot	M16x1.5	100 Nm (73.8 lbf ft)	–
Screw-in nozzles, cooling system	M20x1.5	12 Nm (8.9 lbf ft)	**Loctite® 243™**
Nut, rear wheel spindle	M20x1.5	80 Nm (59 lbf ft)	–
Screw, top steering head	M20x1.5	10 Nm (7.4 lbf ft)	–
Screw, front wheel spindle	M24x1.5	45 Nm (33.2 lbf ft)	–

Wiring diagram (all EXC models)

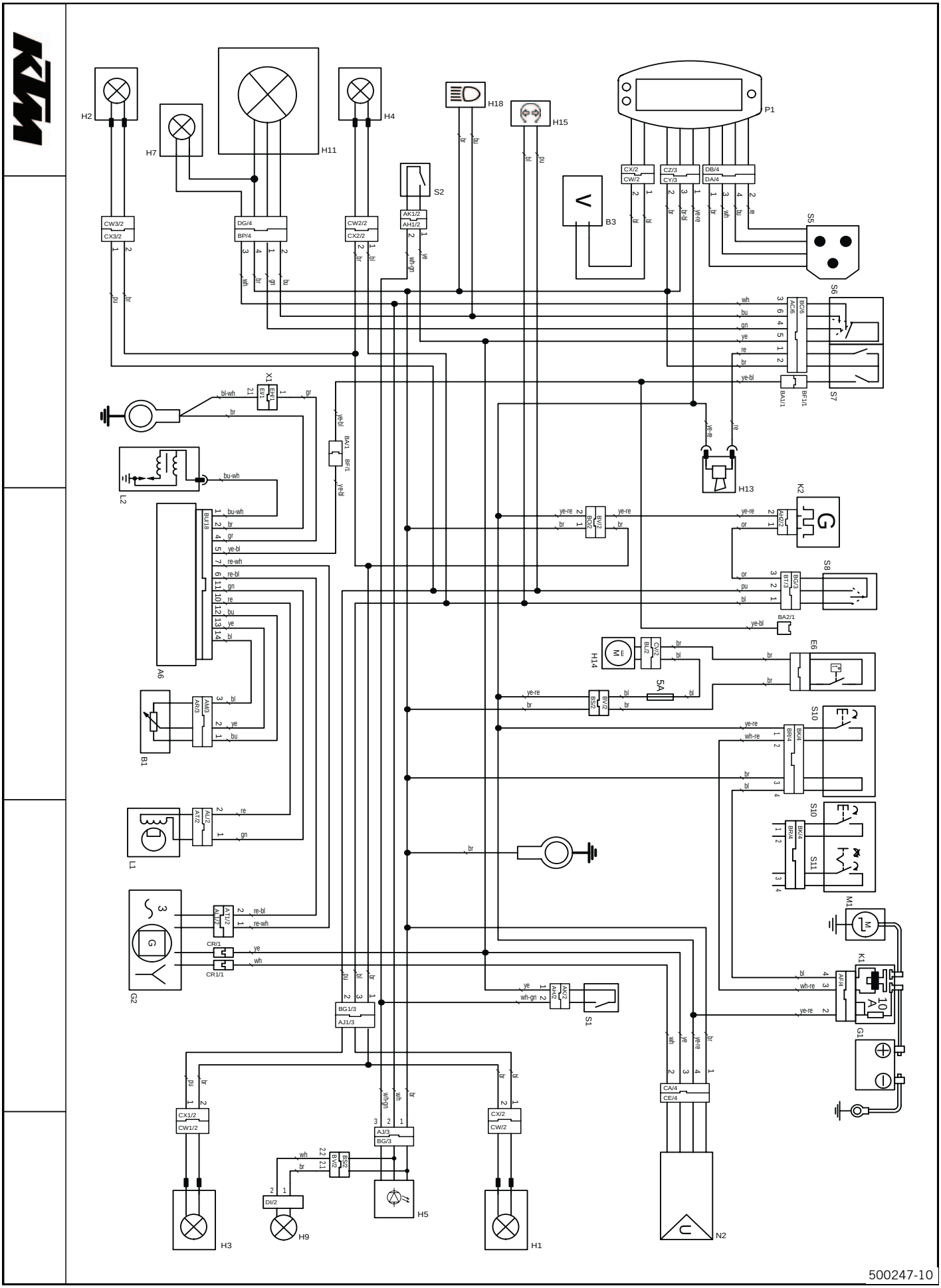

Components

A6	CDI controller
B1	Throttle position sensor
B3	Wheel speed sensor
E6	Thermoswitch (EXC SIX DAYS)
G1	Battery
G2	Generator
H1	Right rear flasher
H2	Left front flasher
H3	Left rear flasher
H4	Right front flasher
H5	Brake/tail light
H7	Parking light
H9	License plate lamp
H11	Low/high beam
H13	Horn
H14	Radiator fan (EXC SIX DAYS)
H15	Flasher indicator light
H18	High beam indicator light
K1	Starter relay with main fuse
K2	Flasher relay
L1	Pulse generator
L2	Ignition coil
M1	Starter motor
N2	Voltage regulator/rectifier
P1	Speedometer
S1	Rear brake light switch
S2	Front brake light switch
S5	Tripmaster switch (optional)
S6	Light switch
S7	Horn button, short circuit button
S8	Flasher switch
S10	Electric starter button
S11	Emergency OFF switch (EXC-R AUS)
X1	Ignition curve plug connection

Cable colors

bl	Black
bl-wh	Black-white
br	Brown
br-bl	Brown-black
bu	Blue
bu-wh	Blue-white
gn	Green
gr	Gray
or	Orange
pu	Violet
re	Red
re-bl	Red-black
re-wh	Red-white
wh	White
wh-gn	White-green
wh-re	White-red

ye	Yellow
ye-bl	Yellow-black
ye-re	Yellow-red

Wiring diagram (all XC-W models)

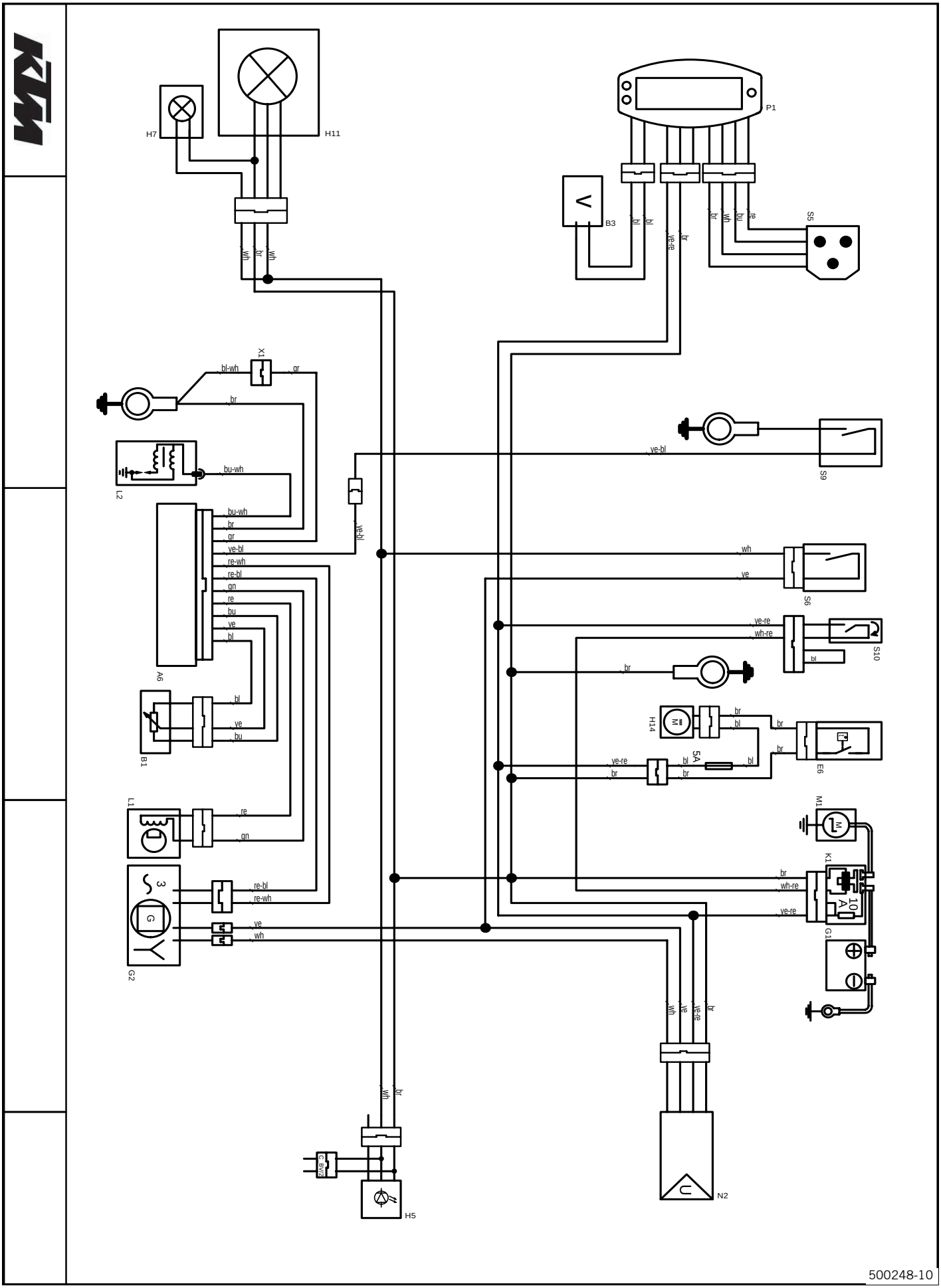

Components	
A6	CDI controller
B1	Throttle position sensor
B3	Wheel speed sensor
E6	Thermoswitch (XC-W ZA)
G1	Battery
G2	Generator
H5	Brake/tail light (XC-W ZA)
H7	Parking light (XC-W ZA)
H11	Low/high beam (XC-W ZA)
H14	Radiator fan (XC-W ZA)
K1	Starter relay with main fuse
L1	Pulse generator
L2	Ignition coil
M1	Starter motor
N2	Voltage regulator/rectifier
P1	Speedometer
S5	Tripmaster switch (optional)
S6	Light switch
S9	Short circuit button
S10	Electric starter button
X1	Ignition curve plug connection

Cable colors	
bl	Black
bl-wh	Black-white
br	Brown
bu	Blue
bu-wh	Blue-white
gn	Green
gr	Gray
re	Red
re-bl	Red-black
re-wh	Red-white
wh	White
wh-re	White-red
ye	Yellow
ye-bl	Yellow-black
ye-re	Yellow-red

Brake fluid DOT 4 / DOT 5.1

According to
– DOT

Guideline
– Use only brake fluid that complies with the specified standards (see specifications on the container) and that possesses the corresponding properties. KTM recommends **Castrol** and **Motorex®** products.

Supplier
Castrol
– **RESPONSE BRAKE FLUID SUPER DOT 4**

Motorex®
– **Brake Fluid DOT 5.1**

Coolant

Guideline
– Use only suitable coolant (even in countries with high temperatures). Using inferior antifreeze can result in corrosion and foaming. KTM recommends **Motorex®** products.

Mixture ratio

Antifreeze: −25… −45 °C (−13… −49 °F)	50 % Anti-corrosion/antifreeze 50 % distilled water

Coolant (mixed ready to use)

Antifreeze	−40 °C (−40 °F)

Supplier
Motorex®
– **Anti Freeze**

Engine oil (SAE 10W/50)

According to
– JASO T903 MA (☛ p. 109)
– SAE (☛ p. 109) (SAE 10W/50)

Guideline
– Use only engine oils that comply with the specified standards (see specifications on the container) and that possess the corresponding properties. KTM recommends **Motorex®** products.

Synthetic engine oil

Supplier
Motorex®
– **Cross Power 4T**

Fork oil (SAE 5)

According to
– SAE (☛ p. 109) (SAE 5)

Guideline
– Use only oils that comply with the specified standards (see specifications on the container) and that possesses the corresponding properties. KTM recommends **Motorex®** products.

Supplier
Motorex®
– **Racing Fork Oil**

Super unleaded (ROZ 95 / RON 95 / PON 91)

According to
– DIN EN 228 (ROZ 95 / RON 95 / PON 91)

Air filter cleaner

Specification
– KTM recommends **Motorex®** products.

Supplier
Motorex®
– **Twin Air Dirt Bio Remover**

Chain cleaner

Specification
– KTM recommends **Motorex®** products.

Supplier
Motorex®
– **Chain Clean 611**

Cleaning and polishing materials for metal, rubber and plastic

Specification
– KTM recommends **Motorex®** products.

Supplier
Motorex®
– **Protect & Shine 645**

Contact spray

Specification
– KTM recommends **Motorex®** products.

Supplier
Motorex®
– **Accu Contact**

High-luster polish for paint

Specification
– KTM recommends **Motorex®** products.

Supplier
Motorex®
– **Moto Polish**

Long-life grease

Specification
– KTM recommends **Motorex®** products.

Supplier
Motorex®
– **Fett 2000**

Motorcycle cleaner

Specification
– KTM recommends **Motorex®** products.

Supplier
Motorex®
– **Moto Clean 900**

Offroad chain spray

Specification
– KTM recommends **Motorex®** products.

Supplier
Motorex®
– **Chain Lube 622**

Oil for foam air filter

Specification

– KTM recommends **Motorex®** products.

Supplier

Motorex®

– **Twin Air Liquid Bio Power**

Universal oil spray

Specification

– KTM recommends **Motorex®** products.

Supplier

Motorex®

– **Joker 440 Universal**

JASO T903 MA

Different technical development directions required a new specification for 4-stroke motorcycles – the JASO T903 MA Standard.Earlier, engine oils from the automobile industry were used for 4-stroke motorcycles because there was no separate motorcycle specification.Whereas long service intervals are demanded for automobile engines, high performance at high engine speeds are in the foreground for motorcycle and ATV engines.With most motorcycles and ATVs, the gearbox and the clutch are lubricated with the same oil as the engine. The JASO MA Standard meets these special requirements.

SAE

The SAE viscosity classes were defined by the Society of Automotive Engineers and are used for classifying oils according to their viscosity. The viscosity describes only one property of oil and says nothing about quality.

3211355en

KTM-Sportmotorcycle AG
5230 Mattighofen/Austria
http://www.ktm.com