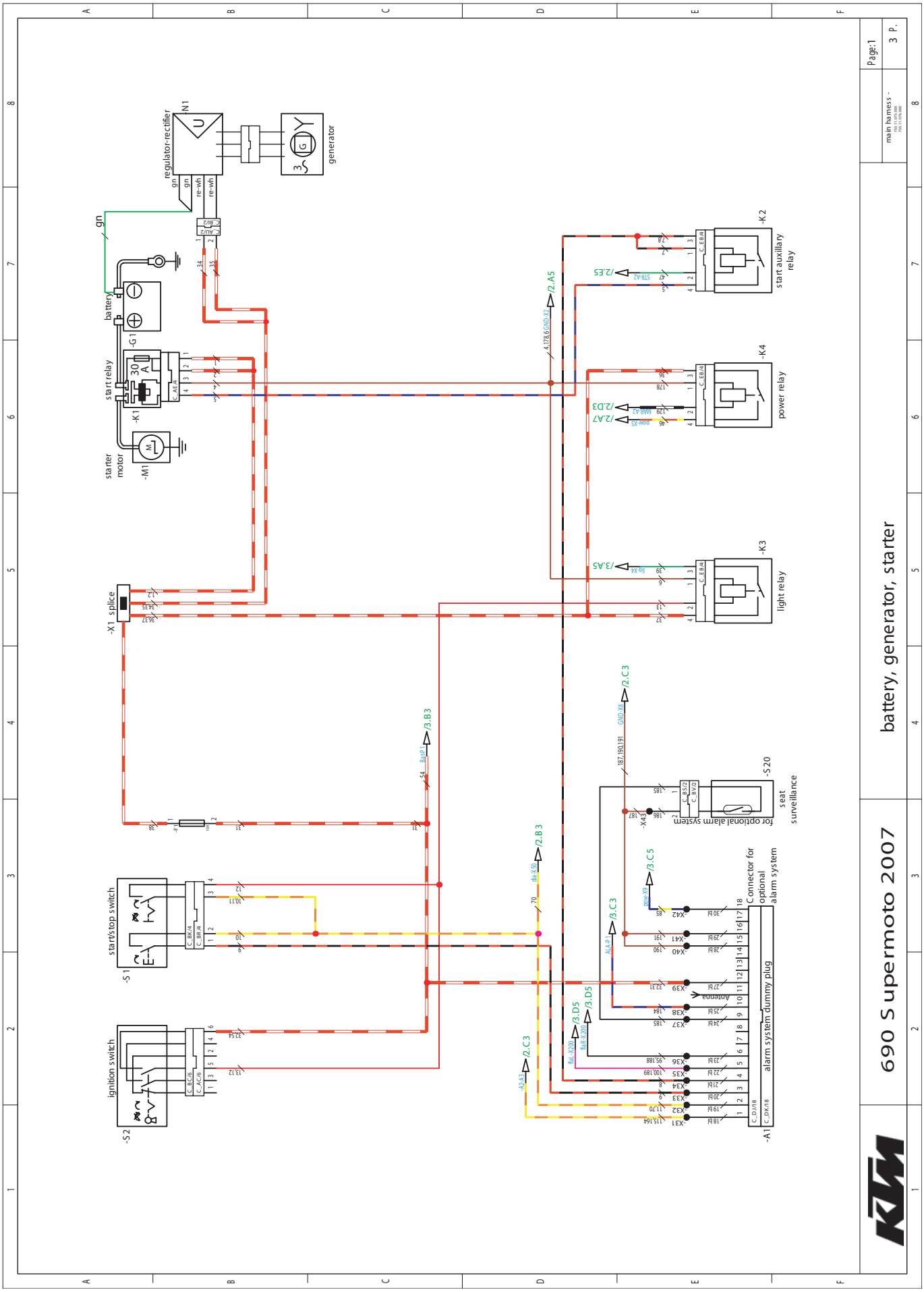
battery, generator, starter
690 S upermoto 2007
main harness -
Page:1
3 P.
regulator-rectifier
-N1
generator
battery
-G1
start relay
-K1
starter motor
-M1
-X1 splice
start auxiliary relay
-K2
power relay
-K4
light relay
-K3
start/stop switch
-S1
ignition switch
-S2
seat surveillance
-S20
for optional alarm system
Connector for optional alarm system
alarm system dummy plug
-A1
Antenna

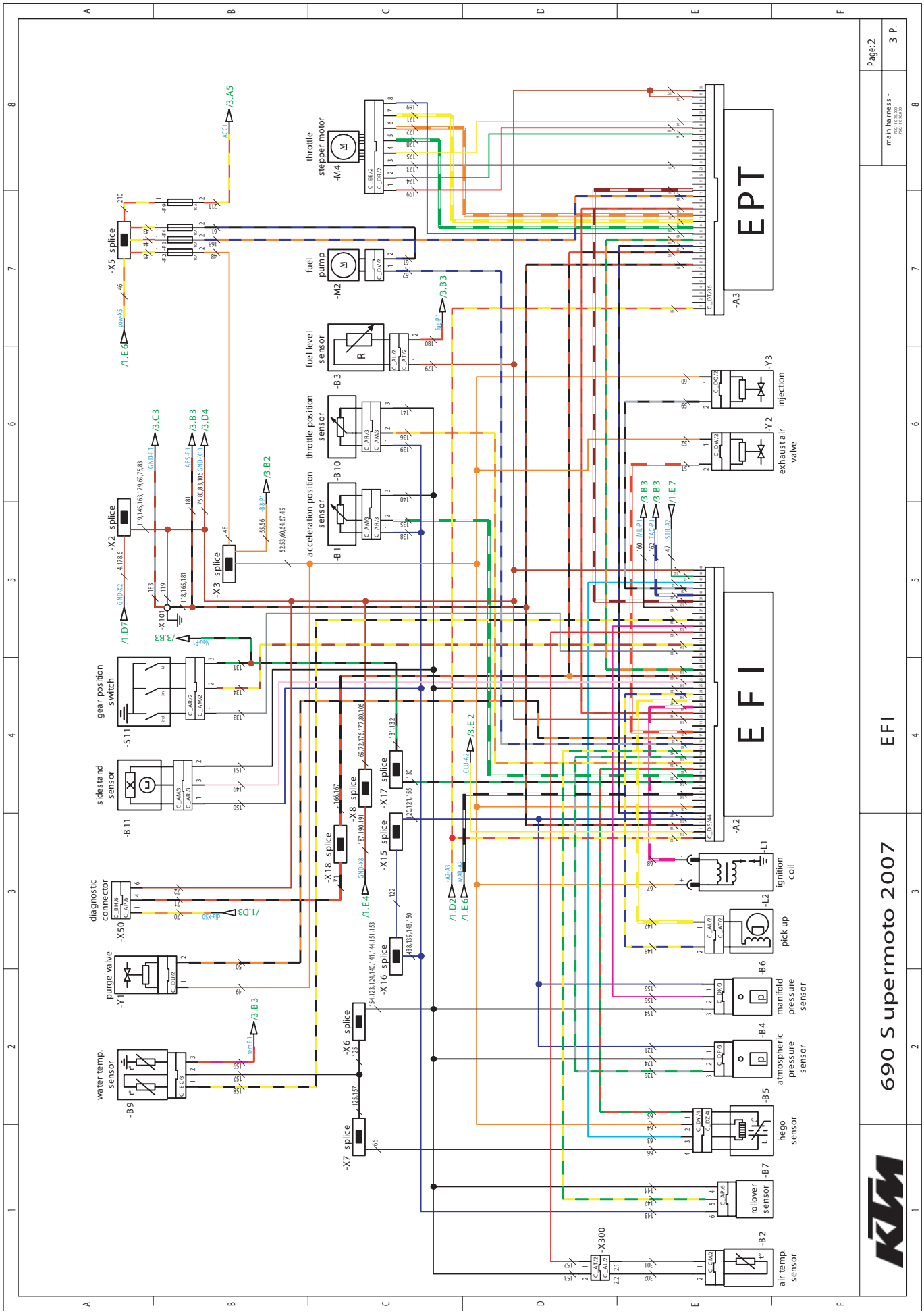
690 Supermoto 2007
EFI
EPT
EFI
Page:2
3 P.
main harness -
throttle stepper motor
-M4
fuel pump
-M2
fuel level sensor
-B3
throttle position sensor
-B10
acceleration position sensor
-B1
-X5 splice
-X2 splice
-X3 splice
-X10
gear position switch
-S11
sidestand sensor
-B11
diagnostic connector
-X50
purge valve
-Y1
water temp. sensor
-B9
-X8 splice
-X17 splice
-X18 splice
-X15 splice
-X16 splice
-X6 splice
-X7 splice
-A3
-A2
injection
-Y3
exhaust air valve
-Y2
ignition coil
-L1
pick up
-L2
manifold pressure sensor
-B6
atmospheric pressure sensor
-B4
hego sensor
-B5
rollover sensor
-B7
air temp. sensor
-B2
-X300

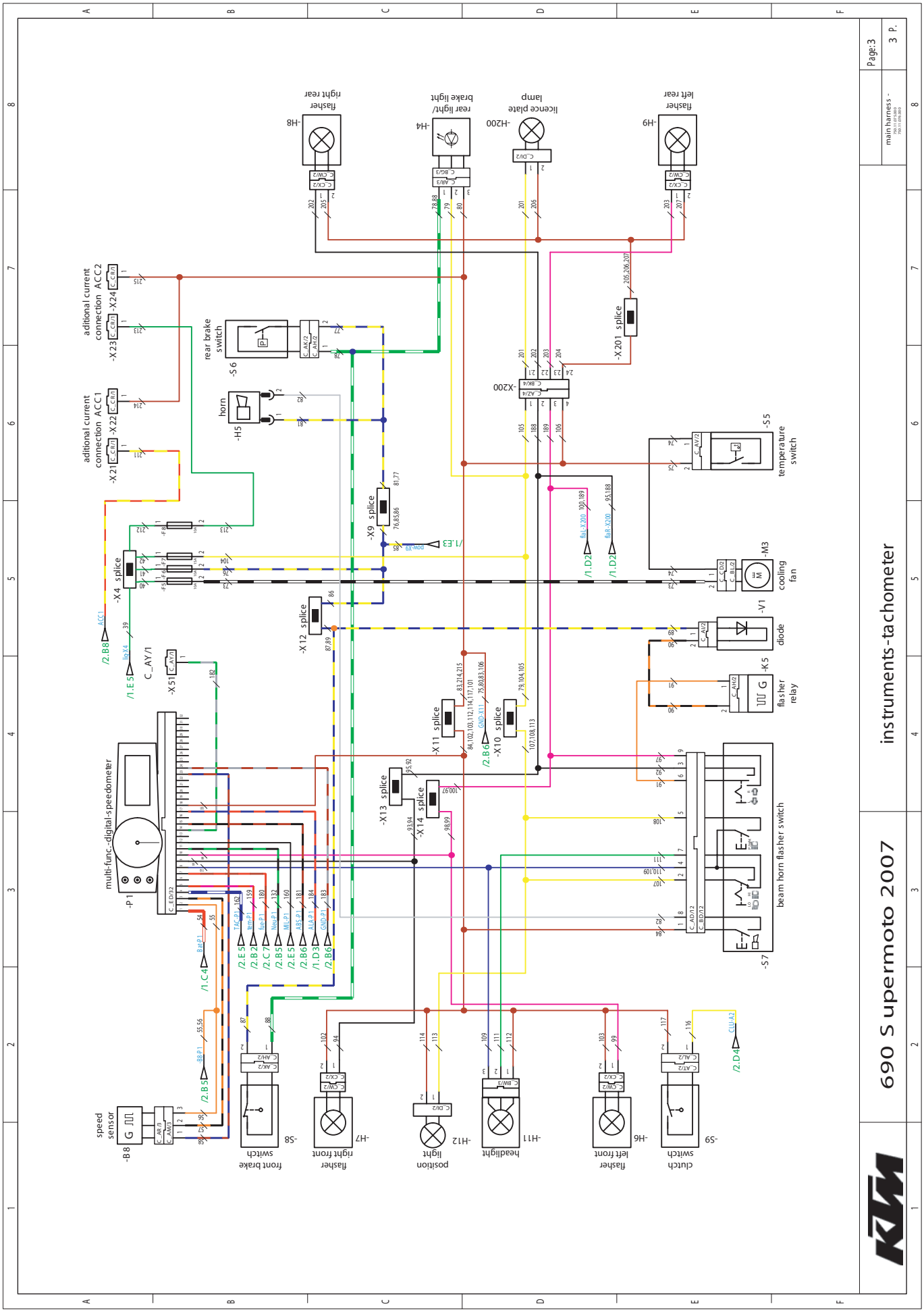
instruments-tachometer
690 S upermoto 2007
main harness -
Page:3
3 P.
multi-func.-digital-speedometer
-P1
speed sensor
-B8
front brake switch
-S8
flasher right front
-H7
position light
-H12
headlight
-H11
flasher left front
-H6
clutch switch
-S9
beam horn flasher switch
-S7
diode
-V1
flasher relay
-K5
cooling fan
-M3
temperature switch
-S5
-X4 splice
-X9 splice
-X12 splice
-X11 splice
-X10 splice
-X13 splice
-X14 splice
-X51
C_AY/1
-X21
-X22
-X23
-X24
aditional current connection ACC1
aditional current connection ACC2
horn
-H5
rear brake switch
-S6
-X200
-X201 splice
flasher right rear
-H8
rear light/ brake light
-H4
licence plate lamp
-H200
flasher left rear
-H9