WWW.KTM.COM

125 DUKE 2015

ART.-NR.: 3CM0812000EN

ENGINE CASE

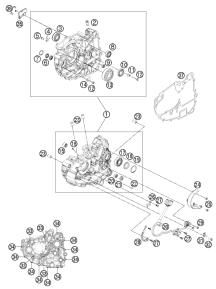

3

CLUTCH COVER

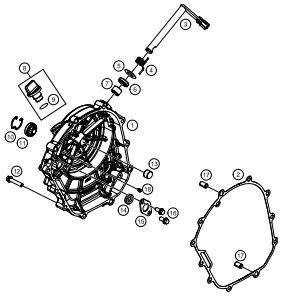

4

BALANCER SHAFT

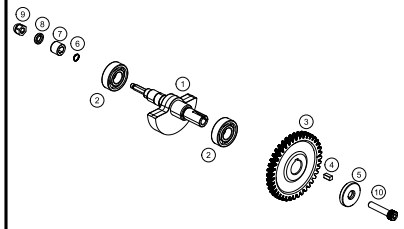

5

CYLINDER

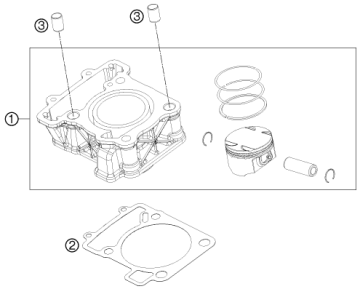

6

CRANKSHAFT, PISTON

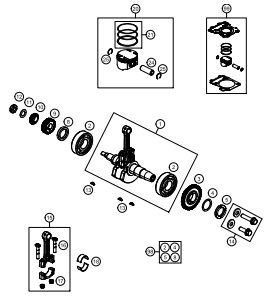

7

CLUTCH

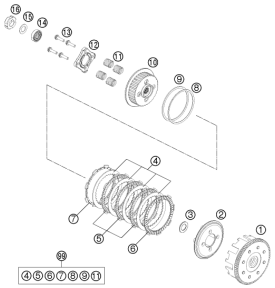

8

TRANSMISSION I - MAIN SHAFT

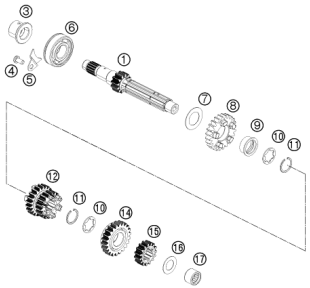

9

TRANSMISSION II - COUNTERSHAFT

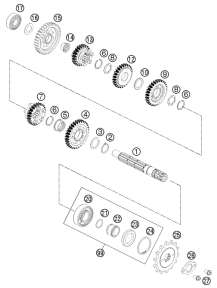

10

SHIFTING MECHANISM

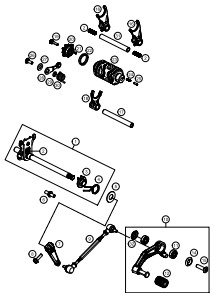

11

WATER PUMP

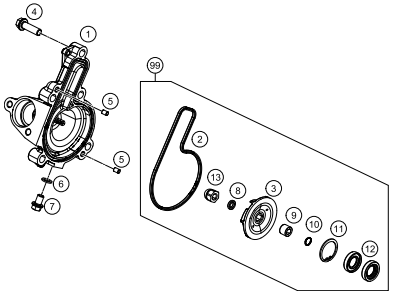

12

COOLING SYSTEM

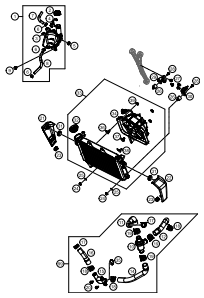

13

VALVE DRIVE

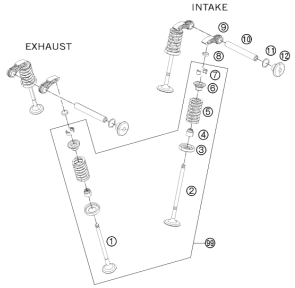

15

TIMING DRIVE

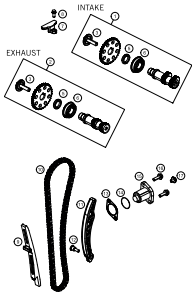

17

CYLINDER HEAD

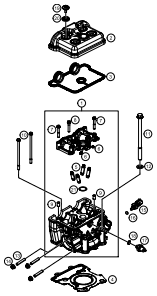

18

LUBRICATING SYSTEM

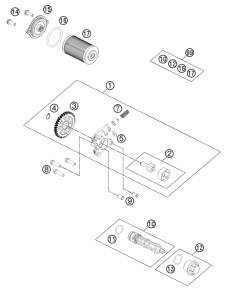

19

IGNITION SYSTEM

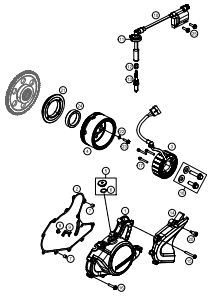

20

ELECTRIC STARTER

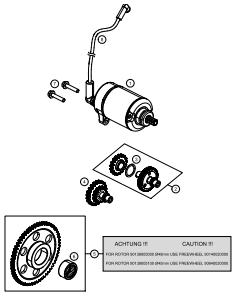

21

THROTTLE BODY

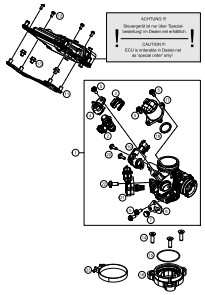

22

All information contained is without obligation. KTM Sportmotorcycle GmbH particularly reserves the right to modify any equipment, technical specifications, prices, colors, shapes, materials, services, service work, constructions, equipment and the like so as to adapt them to local conditions or to cancel any of the above items, all without previous announcement and without giving reasons. KTM may stop manufacturing certain models without previous notice. KTM shall not be held liable for any deviations of availability and/or ability to deliver, illustrations, descriptions, printing and/or other errors. The illustrated models partly contain extra equipment, which is not applied to standard models.

© by KTM Sportmotorcycle GmbH, Mattighofen AUSTRIA; All rights reserved; Reprint, also in extracts, with written allowance of KTM Sportmotorcycle GmbH, Mattighofen only.

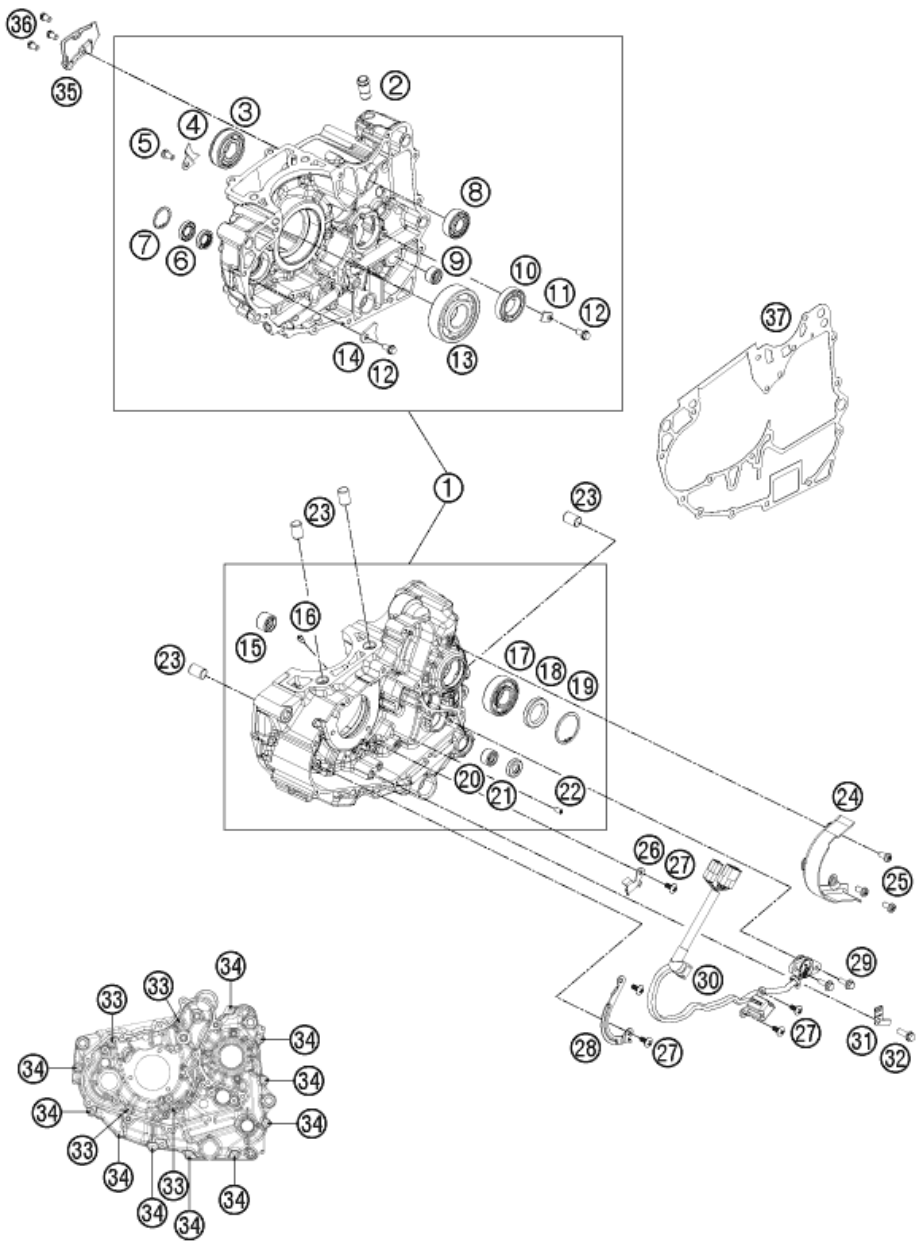

POS	PARTNUMBER	PARTNAME	PIECE
1	90130000144	ENGINE CASE CPL.	1
2	90130022000	VENTILATION CONNECTOR	1
3	J625062040	GROOVED BALL BEARING 6204	1
4	90130004002	LOCK WASHER F.BEARING DRIVE	1
5	J005160123	FLAT HEAD SCREW M6X12 PH	1
6	J760122455	SHAFT SEALING RING 12X24X5,5	2
7	J472025120	CIRCLIP 25X1,2	1
8	90130004003	BALL BEARING 15X35X11	1
9	J618131912	NEEDLE ROLLER BEARING HK1312	1
10	90130004004	BALL BEARING 25X42X9	1
11	90130078000	LOCK WASHER	1
12	90130078001	FLANGED BOLT 6X12	2
13	90130082000	BALL BEARING 63/2/8 HN3CNP	1
14	90130079000	LOCK WASHER F.BEARING AGW	1
15	J618152114	NEEDLE BEAR. HK1514RS 15X21X14	1
16	90130164000	OIL NOZZLE	1
17	J625062041	BALL BEARING 6204-Z/HN3	1
18	J760253706	% SHAFT SEAL RING 25X37X6	1
19	J472037150	CIRCLIP 37X1,5	1
20	J618131912	NEEDLE ROLLER BEARING HK1312	1
21	90130003004	SEAL RING 13X22X5,5	1
22	90130058000	OILJET	1
23	90130003007	DOWEL D14	4
24	90130047000	CHAIN GUARD	1
25	J005060123	FLAT HEAD SCREW M6X12 PH	3
26	90130003005	CABLE SUPPORT BELOW	1
27	J005050106S	FLAT HEAD SCREW M5X1 SS	5
28	90130003006	CABLE SUPPORT ABOVE	1
29	J025050163	HH-COLLAR SCREW M5X16 WS8	2
30	90111023000	GEAR-POS.SENSOR INL.PULS. COIL	1
31	90140020002	BRACKET F. FREE WHEEL GEAR	1
32	J028060163	HH-COLLAR SCREW M6X16 WS8	1
33	J025060606	HH COLLAR SCREW M6X60 SW10	4
34	J025060401	HH COLLAR SCREW M6X40	10
35	90630042000	BREATHER PLATE	1
36	J985050103	PAN CROSS SCREW M5X10 PH	3
37	90630039000	ENGINE CASE GASKET	1

129063010

C159063010

* NEW PART

X ON DEMAND

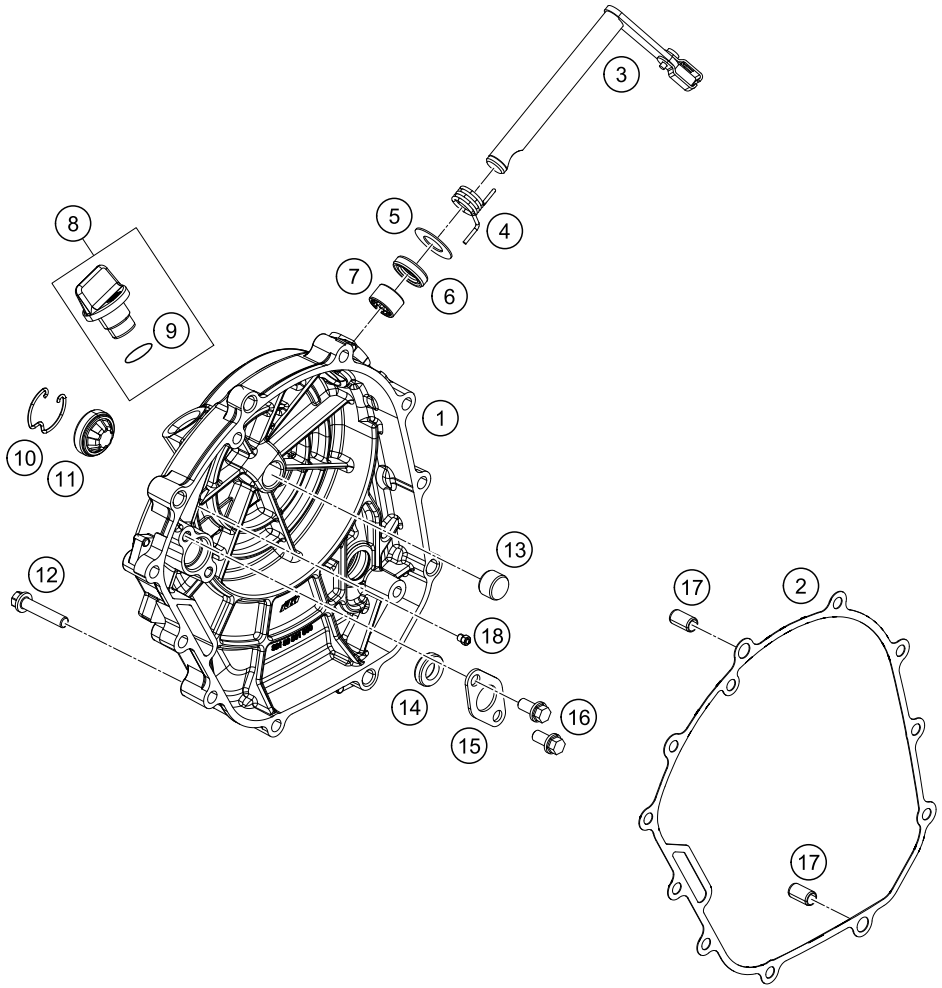

149013020

POS	PARTNUMBER	PARTNAME	PIECE
1	90130026144	CLUTCH COVER CPL.	1
2	90130027000	GASKET CLUTCH COVER	1
3	90132048033	CLUTCH RELEASE LEVER CPL.	1
4	90132048004	SPRING F. RELEASE LEVER	1
5	90132048005	WASHER 12,5X24X0,8MM	1
6	90132051000	OIL SEAL RING	1
7	90132050000	NEEDLE BEARING	1
8	90130020000	OIL PLUG CPL.	1
9	J770013824	O-RING 13,8X2,4	1
10	90130095001	WIRE CIRCLIP 28X1,5	1
11	90130095100	OIL GAUGE GLASS	1
12	J025060301	HH COLLAR SCREW M6X30	11
13	90132054000	PUSH ROD	1
14	90134027000	OIL SEAL RING	1
15	90130026002	COVER PLATE	1
16	90130078001	FLANGED BOLT 6X12	2
17	90130024000	PIN DOWEL 8X6,4X14MM	2
18	90130064000	OIL JET	1

C159063020

* NEW PART

X ON DEMAND

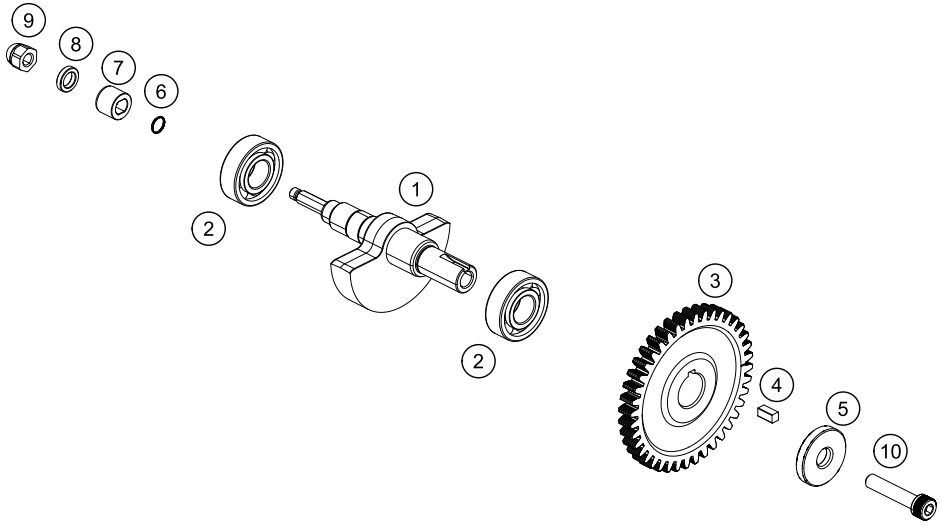

129063030

POS	PARTNUMBER	PARTNAME	PIECE
1	90130057100	BALANCER SHAFT	1
2	J625062030	BALL BEARING 6203	2
3	90130055000	DRIVE WHEEL BALANCER SHAFT	1
4	90130055001	CLUTCH HUB DRIVE WHEEL BAL.SHA	1
5	90130057050	WASHER 8,2X26X4,5 "O"	1
6	J770875008	O-RING 8,75X0,8	1
7	90130055104	% SLEEVE	1
8	90130055006	SPACER SHIM	1
9	90135058000	DOME NUT WAPU-WHEEL	1
10	90130059000	HH COLLAR SCREW M6X16	1

C129013030

* NEW PART

X ON DEMAND

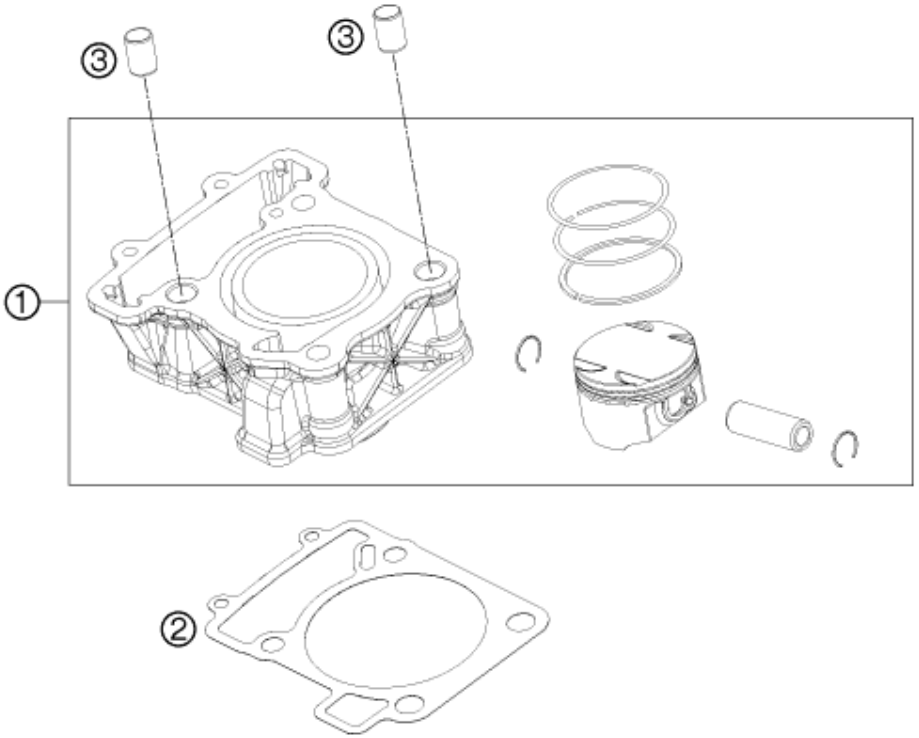

POS	PARTNUMBER	PARTNAME	PIECE
1	90130038000	CYLINDER + PISTON KIT	1
2	90130035000	CYLINDER BASE GASKET	1
3	90130003007	DOWEL D14	2

119013040

C119013040

* NEW PART

X ON DEMAND

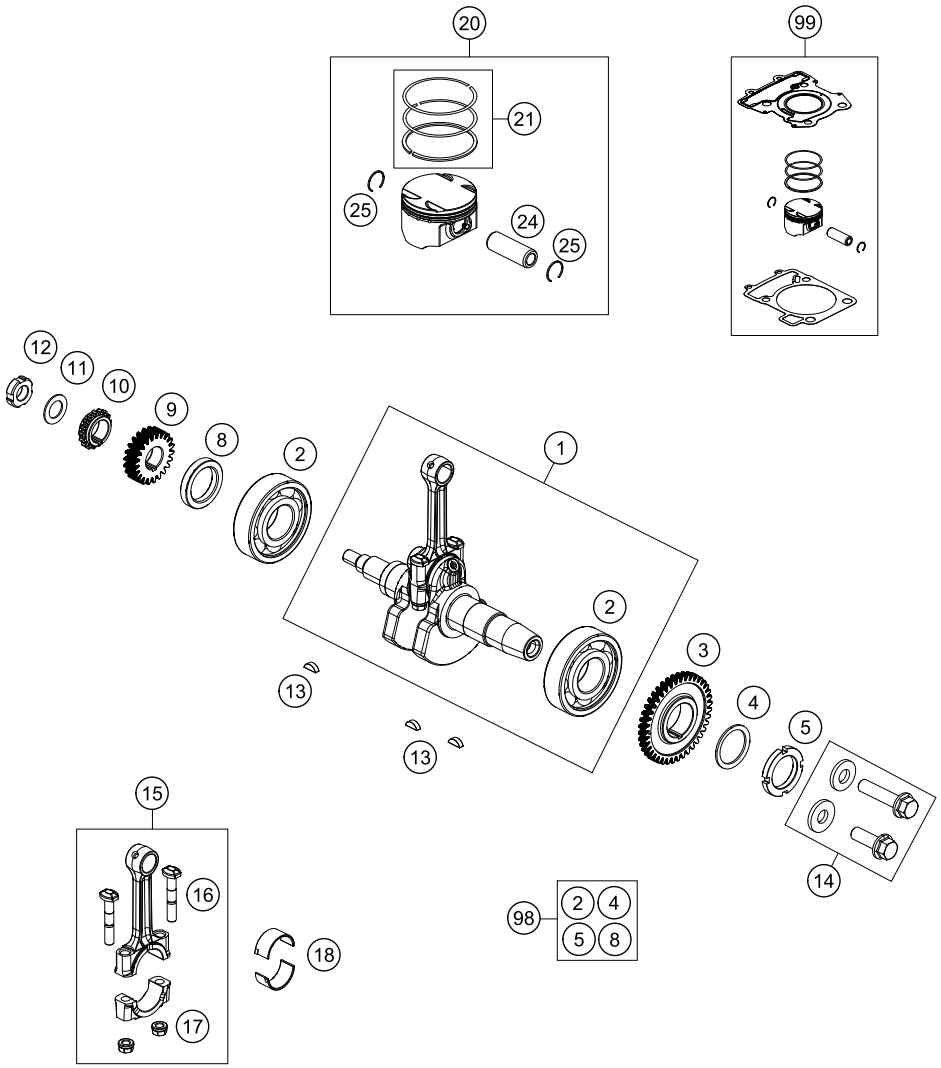

119013060

POS	PARTNUMBER	PARTNAME	PIECE
1	90130018000	CRANKSHAFT CPL.	1
2	90130082000	BALL BEARING 63/2/8 HN3CNP	2
3	90130018006	DRIVE WHEEL CRANKSH. F. AGW	1
4	90230069000	CONICAL WASHER 28,35X38X1,75	1
5	90130018008	NUT FOR DRIVE WHEEL AGW	1
8	90130018003	SPACER SHIM	1
9	90132024000	PRIMARY GEAR 22T.	1
10	90136014017	TIMING GEAR 17 T.	1
11	90130029050	WASHER PRIMARY DRIVE GEAR	1
12	90132025000	NUT SPROCKET DRIVE LOCK M14	1
13	J888040050	WOODRUFF KEY 4X5X13	3
14	90130018044	SCREW DRIVE GEAR KIT	1
15	90130015000	CONNECTING ROD CPL.	1
16	90130015001	CONNECTING-ROD BOLT	2
17	90130015002	NUT F. CONNECTING-ROD BOLT	2
18	90130015010	CON ROD BEARING SHELL	2
18	90130015011	CON ROD BEARING SHELL GREEN	x
18	90130015012	CON ROD BEARING SHELL BLUE	x
20	90130007000	PISTON CPL.	1
21	90130030010	PISTON RING CPL.	1
24	90130033000	PISTON BOLT	1
25	90130074000	CIRCLIP	2
98	00050002314	CRANKSHAFT REP. KIT DUKE	x
99	00050000210	PISTON KIT 125 DUKE 11-13	x

C139013060

* NEW PART

X ON DEMAND

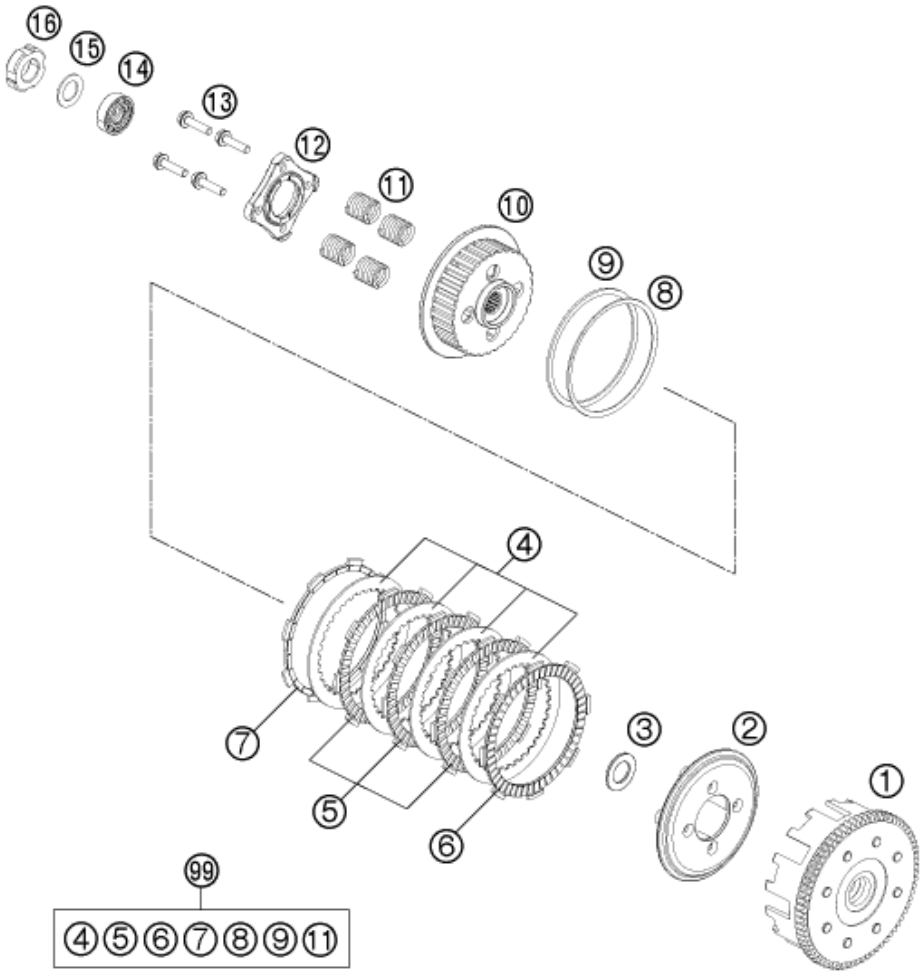

119013210

POS	PARTNUMBER	PARTNAME	PIECE
1	90132001044	OUTER CLUTCH HUB CPL.	1
2	90132003000	PRESSURE CAP	1
3	90132020000	STOP DISK	1
4	90132010000	INTERMEDI. DISC	4
5	90132011000	LINING DISK	3
6	90132111000	LINING DISK INSIDE	1
7	90132211000	LINING DISC TURNED OFF	1
8	90132034000	BELLEVILLE SPRING	1
9	90132035000	SUPPORT RING	1
10	90132002000	INNER CLUTCH HUB	1
11	90132005000	CLUTCH SPRING	4
12	90132006000	PRESSURE PLATE	1
13	90132001001	COLLAR SCREW 6X25	4
14	90132095000	CLUTCH LIFTER BEARING	1
15	90632038000	BELLEVILLE SPRING	1
16	90132019000	CLUTCH NUT	1
99	90132011010	CLUTCH KIT 125 DUKE 11-13	x

C119013210

* NEW PART

X ON DEMAND

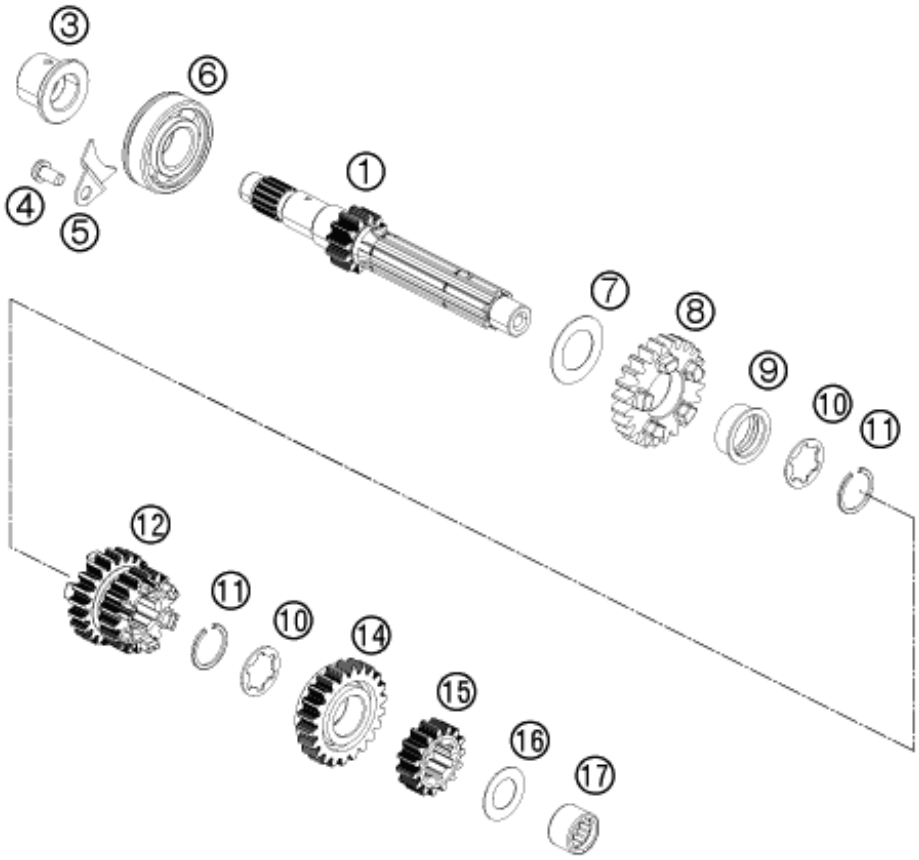

129063330

POS	PARTNUMBER	PARTNAME	PIECE
1	90633001000	MAIN SHAFT CPL.	1
3	90133001011	COLLAR BUSHING MAIN SHAFT	1
4	J005060123	FLAT HEAD SCREW M6X12 PH	1
5	90130004002	LOCK WASHER F.BEARING DRIVE	1
6	J625062040	GROOVED BALL BEARING 6204	1
7	90133032000	WASHER 20X33X0,5	1
8	90133006000	DRIVE WHEEL 6. GEAR	1
9	90133001003	BUSHING	1
10	90633033000	WASHER	2
11	J471020122	CIRCLIP 20X1,2	2
12	90133003000	DRIVE WHEEL 3. G./4.G.	1
14	90133005000	DRIVE WHEEL 5. GEAR	1
15	90633002000	DRIVE WHEEL 2. GEAR	1
16	90633001004	THRUST WASHER	1
17	J618152114	NEEDLE BEAR. HK1514RS 15X21X14	1

C129063330

* NEW PART

X ON DEMAND

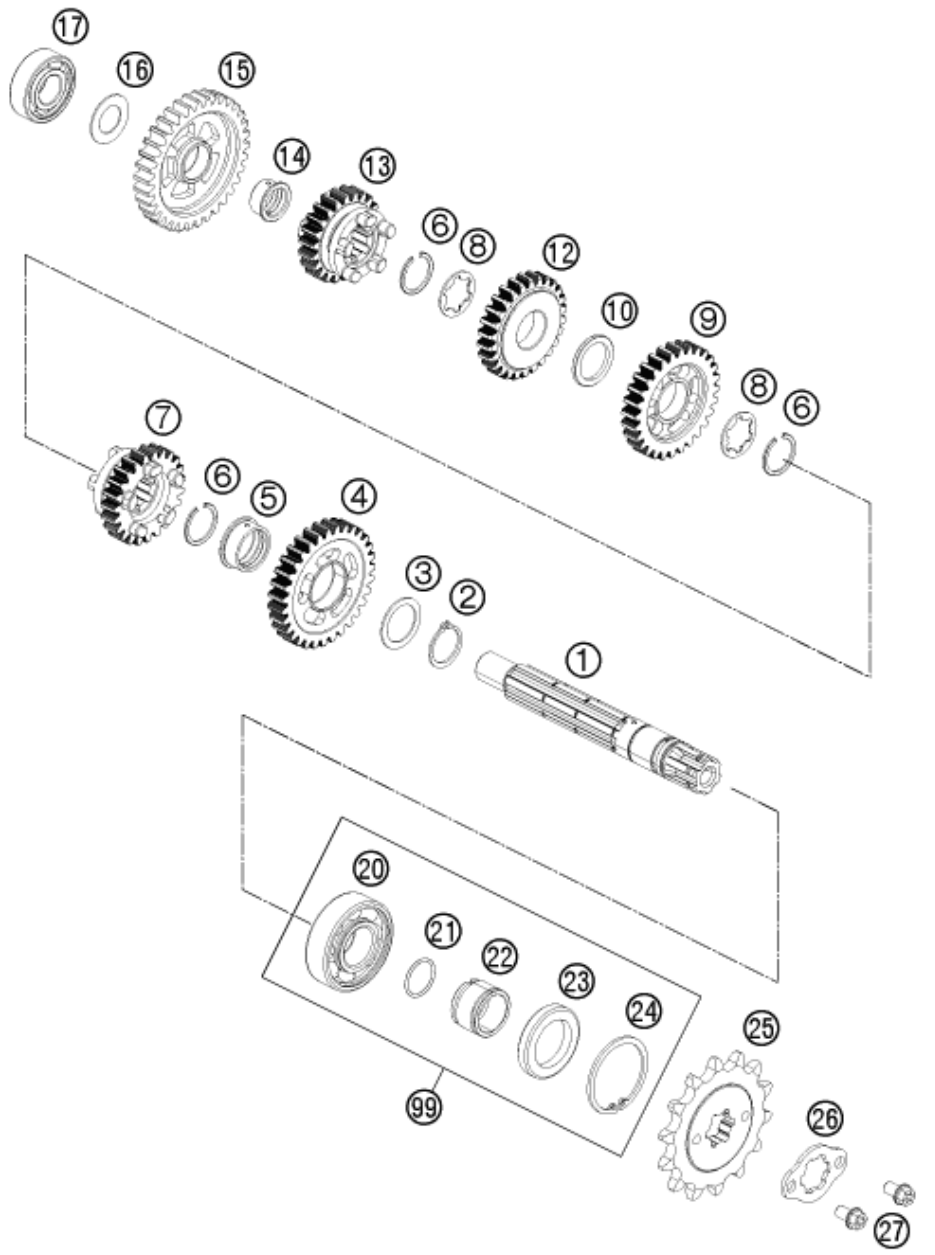

129063360

POS	PARTNUMBER	PARTNAME	PIECE
1	90633010000	COUNTER SHAFT CPL.	1
2	J471020121	CIRCLIP 20X1,2	1
3	90133034100	WASHER 20,2X27X1	1
4	90633012000	COUNTERWHEEL 2. GEAR	1
5	90133001003	BUSHING	1
6	J471020122	CIRCLIP 20X1,2	3
7	90133015000	COUNTERWHEEL 5. GEAR	1
8	90633033000	WASHER	2
9	90133013000	COUNTERWHEEL 3. GEAR	1
10	90633001007	THRUST WASHER	1
12	90133014000	COUNTERWHEEL 4. GEAR	1
13	90133016000	COUNTERWHEEL 6. GEAR	1
14	90133001009	BUSHING	1
15	90133011000	COUNTERWHEEL 1. GEAR	1
16	90133038000	PLAIN WASHER	1
17	90130004003	BALL BEARING 15X35X11	1
20	J625062041	BALL BEARING 6204-Z/HN3	1
21	J770017515	O-RING 17,5X1,5	1
22	90133029003	BUSHING SPROCKET	1
23	J760253706	% SHAFT SEAL RING 25X37X6	1
24	J472037150	CIRCLIP 37X1,5	1
25	90133029014	SPROCKET 14T.	1
26	90133029001	BRACKET SPROCKET	1
27	J025060106	HH COLLAR SCREW M6X10 WS10	2
99	00050000944	COUNTER SHAFT REP. KIT 125DUKE	x

C129063360

* NEW PART

X ON DEMAND

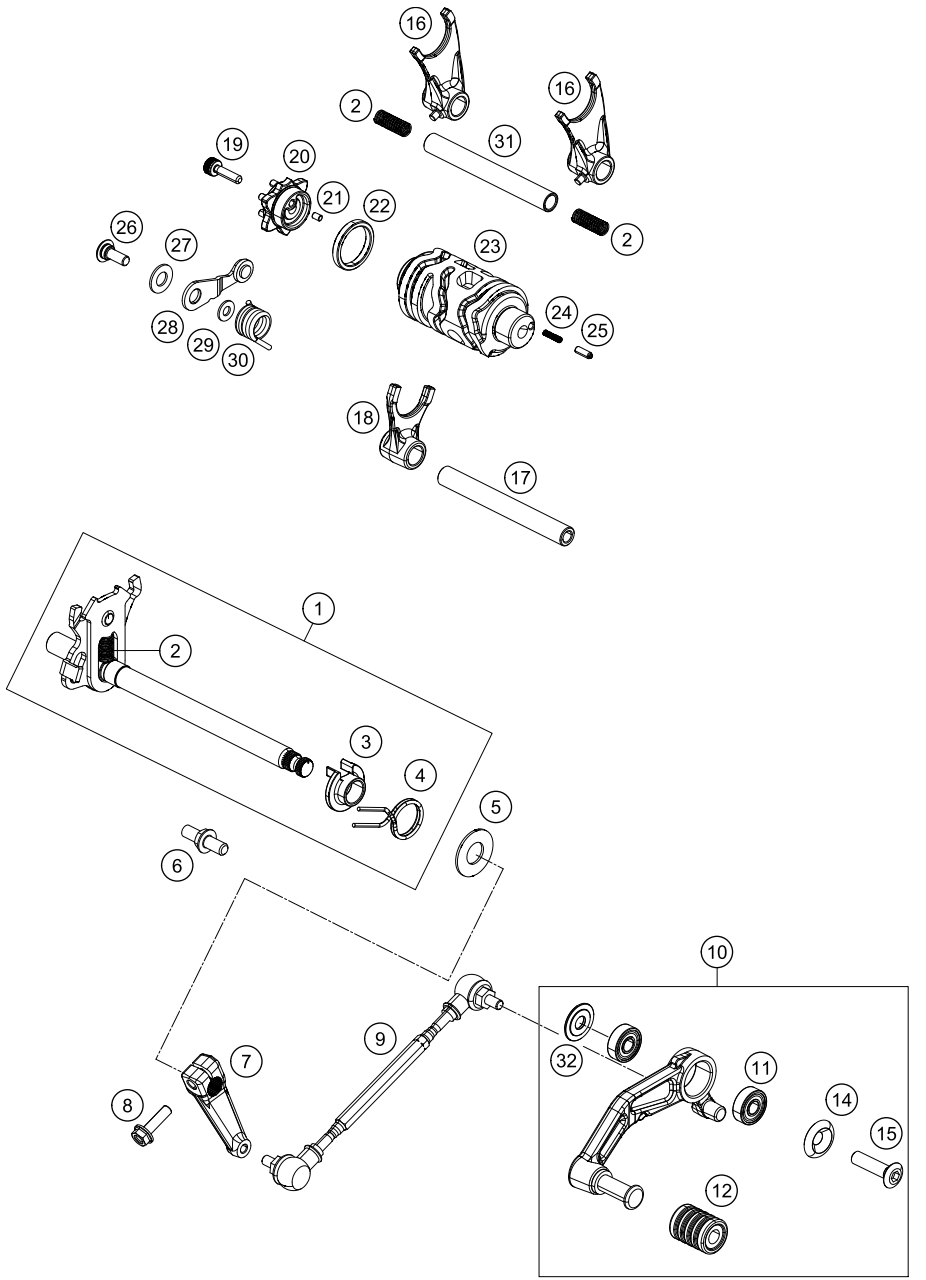

139013410

POS	PARTNUMBER	PARTNAME	PIECE
1	90134005033	SHIFT SHAFT CPL.	1
2	90134009000	TENSION SPRING	3
3	90134022000	SPRING BUSHING	1
4	90134014000	RETURN SPRING	1
5	90134050000	STOP DISK 14X30X1,5	1
6	90134016000	SPRING GUIDE	1
7	90634031010	BAFFLE SHIFT LEVER	1
8	J025060223	HH COLLAR SCREW M6X22 SW10	1
9	90634040033	TENSION ROD CPL.	1
10	90134031133	SHIFTING LEVER CPL.	1
11	J625060800	BALL BEARING 608	2
12	90134035000	RUBBER	1
14	90134031103	SPACER SHIFTING LEVER	1
15	90134034100	HH COLLAR SCREW M8X30 SW10	1
16	90134002000	SHIFT FORK COUNTER	2
17	90134019000	GEAR SHIFT RAIL	1
18	90134001000	SHIFT FORK MAIN	1
19	90134015003	AH SCREW M6X20 SELF LOCKING	1
20	90134015000	SHIFT DRUM LOCATING	1
21	90134013000	PARALLEL PIN	1
22	90134012002	SPACER	1
23	90134012000	SHIFT ROLLER	1
24	90634012003	CONTACT SPRING	1
25	90134012001	BOLT FOR GEAR INDICATOR	1
26	90134025000	SCREW LOCKING LEVER	1
27	90134030000	WASHER LOCKING LEVER	1
28	90134024033	LOCKING LEVER CPL.	1
29	90134039000	WASHER 6X12,8X1,2	1
30	90134023000	ARRESTING LEVER SPRING	1
31	90134190000	GEAR SHIFT RAIL COUNTER	1
32	90134031020	WASHER SHIFTING LEVER	1

C139013410

* NEW PART

X ON DEMAND

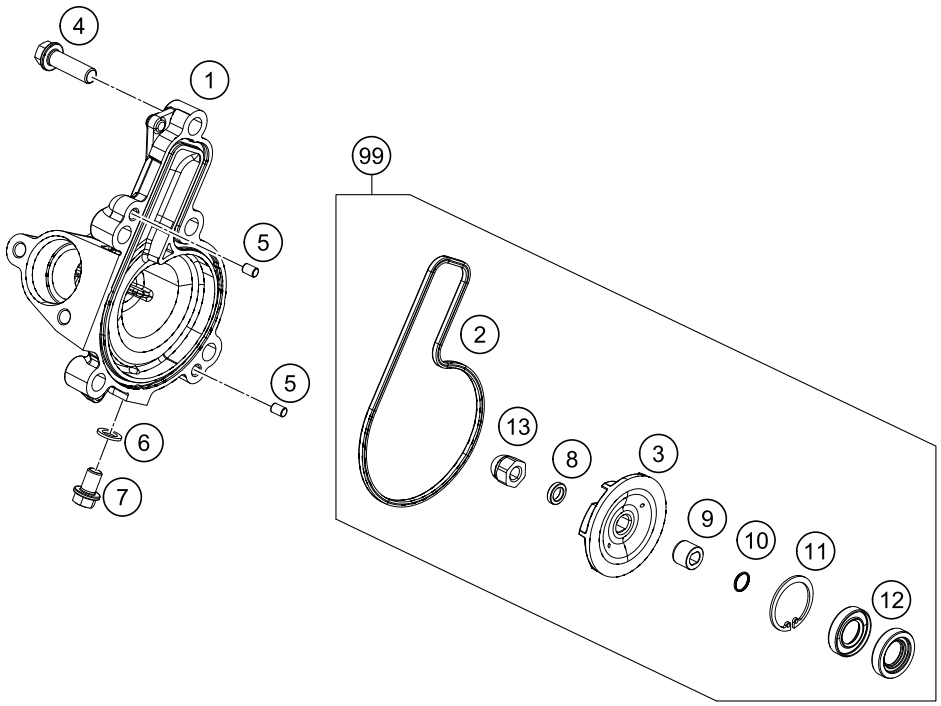

159063510

POS	PARTNUMBER	PARTNAME	PIECE
1	90135052000	WATERPUMP COVER	1
2	90135053000	WATER PUMP COVER GASKET	1
3	90135055000	WATER PUMP ROTOR	1
4	J025060201	HH COLLAR SCREW M6X20	5
5	90134013000	PARALLEL PIN	2
6	J603061001	COPPER GASKET	1
7	90110057000	BOLT M6X10	1
8	90130055006	SPACER SHIM	1
9	90130055204	SLEEVE BALANCER DRIVEN	1
10	J770875008	O-RING 8,75X0,8	1
11	J472025120	CIRCLIP 25X1,2	1
12	J760122455	SHAFT SEALING RING 12X24X5,5	2
13	90135058000	DOME NUT WAPU-WHEEL	1
99	90135055110		x

C159063510

* NEW PART

X ON DEMAND

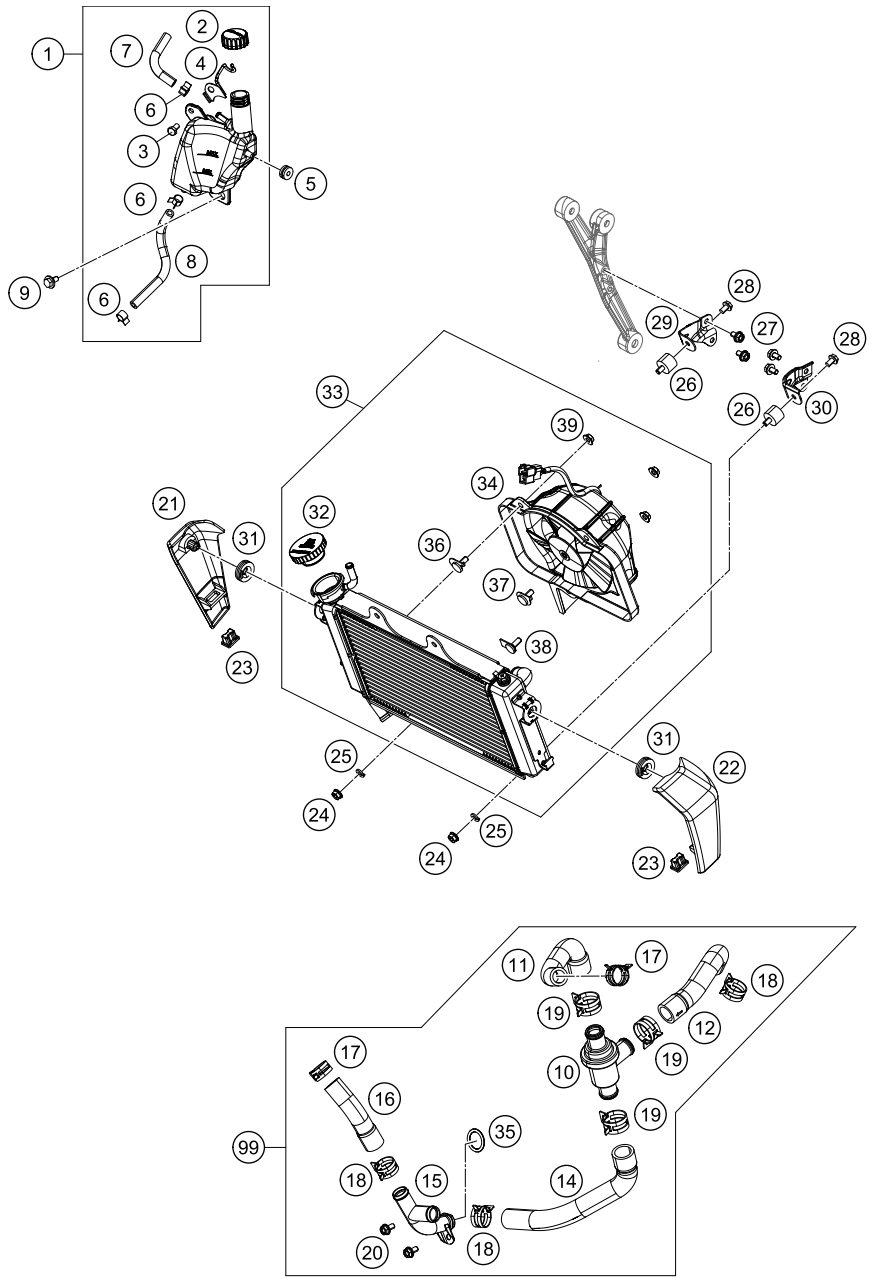

159063530

POS	PARTNUMBER	PARTNAME	PIECE
1	90135065033	EXPANSION RESERVOIR CPL.	1
2	90135066000	PLUG F. EXPANSION TANK	1
3	J025060126	HH COLLAR SCREW M6X12 SW10	1
4	90103001033	BRACKET TUBE DRAIN	1
5	90135065050	GROMMET EXPANSION TANK	1
6	90107018011	CLAMP 10MM	4
7	90135067000	HOSE 6X10,5X80 MM	1
8	90135067050	HOSE 6X10X154 MM	1
9	90135074000	SPECIAL SCREW M6X12 FLANGED	1
10	90135017000	THERMOSTAT	1
11	90135024020	RADIATORHOSE THERM.-RADIATOR	1
12	90135025100	COOLING HOSE ENGINE - THERM.	1
14	90135024010	RADIATORHOSE THERM.-COOL.PIPE	1
15	90135026000	COOLING PIPE "T" CPL.	1
16	90135024030	RADIATORHOSE RADI.-COOLL." T "	1
17	90135020000	HOSE CLAMP D23	2
18	90135020001	HOSE CLAMP D26	3
19	90135020003	HOSE CLAMP D28	3
20	J025060126	HH COLLAR SCREW M6X12 SW10	2
21	90108061000	RADIATOR PROTECTOR R/S	1
22	90108060000	RADIATOR PROTECTOR L/S	1
23	90108060002	DAMP. RUBBER II RADIATOR PROT	2
24	J926060000	FLANGED NUT M6 WS10 SELF LOCK.	4
25	J127060003	WASHER SPRING B6	4
26	90135001001	RUBBER GROMMET	4
27	J025060103	HH COLLAR SCREW M6X10 SW10	4
28	J026060083	HH COLLAR SCREW M6X8 SW10	4
29	90103006001	RADIATOR SUPPORT R/S BELOW	1
30	90103005001	RADIATORSUPPORT L/S BELOW	1
31	90108060001	DAMPING RUBBER I RADIATOR PROT	2
32	90135016100	RADIATOR CAP	1
33	90635010000	RADIATOR CPL. WITH FAN	1
34	90835041033	FAN CPL.	1
35	J770018530	O-RING 18,5X3	1
36	90835041001	BRACKET FAN MOUNTING 1	1
37	90835041002	BRACKET FAN MOUNTING 2	1
38	90835041003	BRACKET FAN MOUNTING 3	1

C159063530

* NEW PART

X ON DEMAND

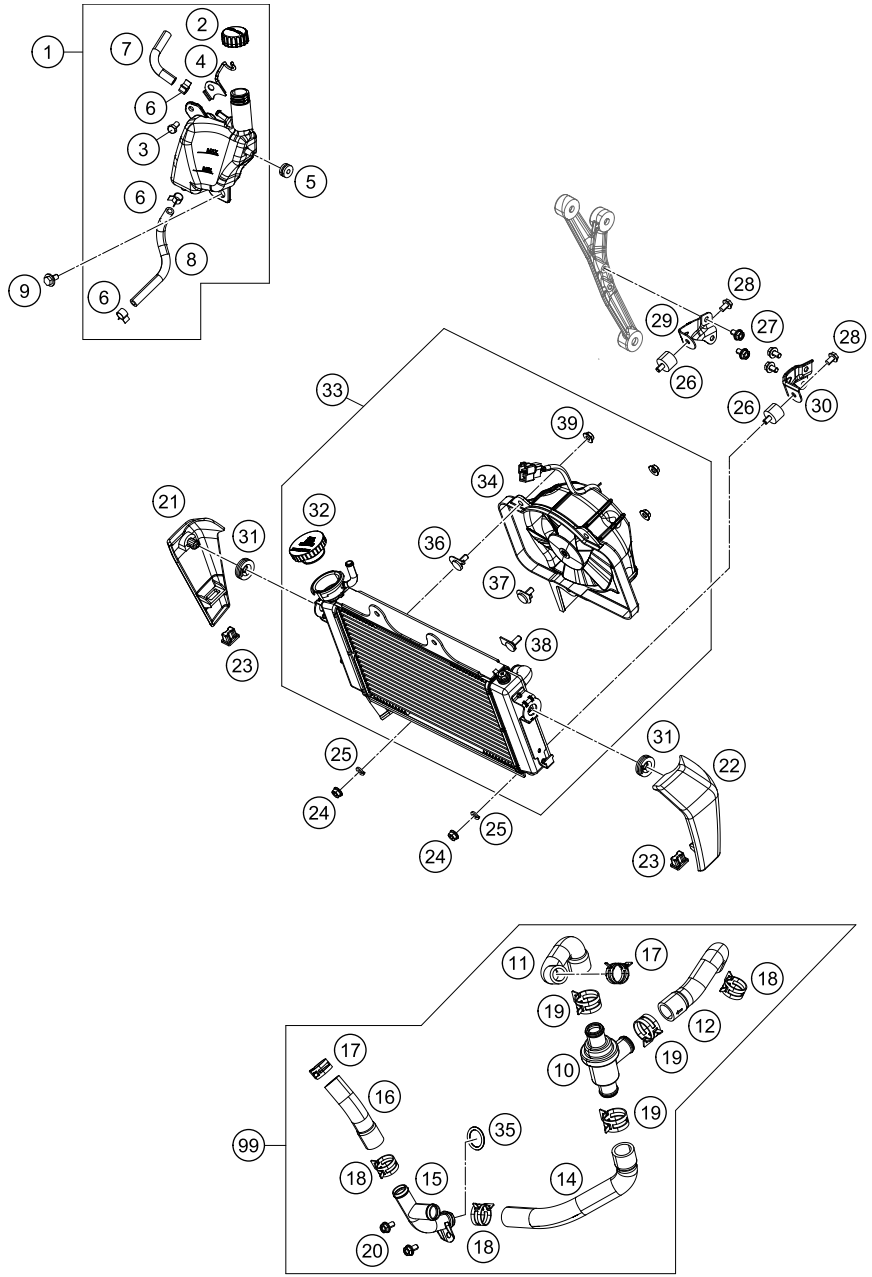

159063530

POS	PARTNUMBER	PARTNAME	PIECE
39	90835041004	FLANGED NUT	3
99	90135017110	COOLING HOSE KIT DUKE	x

C159063530

* NEW PART

X ON DEMAND

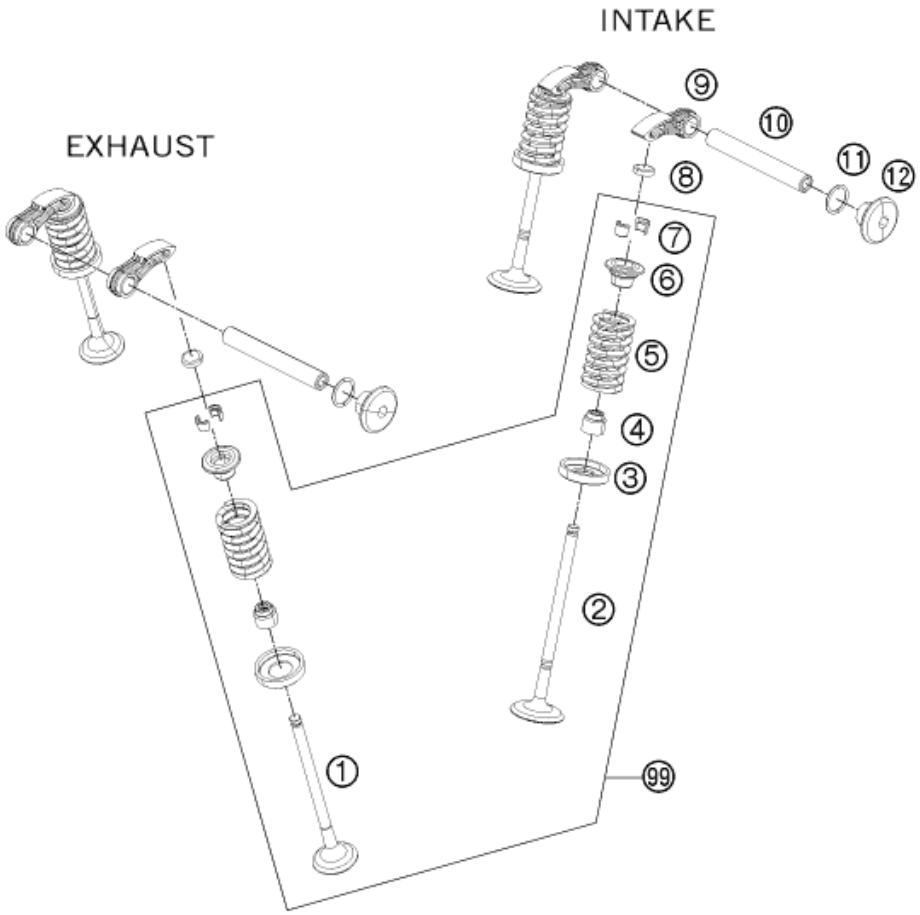

119013610

POS	PARTNUMBER	PARTNAME	PIECE
1	90136031000	EXHAUST VALVE	2
2	90136030000	INTAKE VALVE	2
3	90136036000	VALVE SPRING HOLDER	4
4	90136027000	VALVE-STEM SEALING	4
5	90136028000	VALVE SPRING	4
6	90136032000	VALVE SPRING RETAINER	4
7	90136033000	VALVE COLLET	8
8	90136035010	SHIM KIT 125/200 Duke	x
8	90136035200	SHIM D=8,7/2,00	x
8	90136035204	SHIM D=8,7/2,04	x
8	90136035208	SHIM D=8,7/2,04	x
8	90136035212	SHIM D=8,7/2,12	x
8	90136035216	SHIM D=8,7/2,16	x
8	90136035220	SHIM D=8,7/2,20	x
8	90136035224	SHIM D=8,7/2,24	x
8	90136035228	SHIM D=8,7/2,28	x
8	90136035232	SHIM D=8,7/2,32	x
8	90136035236	SHIM D=8,7/2,36	x
8	90136035240	SHIM D=8,7/2,40	x
8	90136035244	SHIM D=8,7/2,44	x
8	90136035248	SHIM D=8,7/2,48	x
8	90136035252	SHIM D=8,7/2,52	x
8	90136035256	SHIM D=8,7/2,56	x
8	90136035260	SHIM D=8,7/2,60	x
8	90136035264	SHIM D=8,7/2,64	x
8	90136035268	SHIM D=8,7/2,68	x
8	90136035272	SHIM D=8,7/2,72	x
8	90136035276	SHIM D=8,7/2,76	x
8	90136035280	SHIM D=8,7/2,80	x
8	90136035284	SHIM D=8,7/2,84	x
8	90136035288	SHIM D=8,7/2,88	x
8	90136035292	SHIM D=8,7/2,92	x
8	90136035296	SHIM D=8,7/2,96	x
8	90136035300	SHIM D=8,7/3,00	x
8	90136035304	SHIM D=8,7/3,04	x
9	90136060000	VALVE LEVER	4
10	90136056000	VALVE LEVER SHAFT	2
11	J770010312	O-RING 10,3X1,2 MM	2

C119013610

* NEW PART

X ON DEMAND

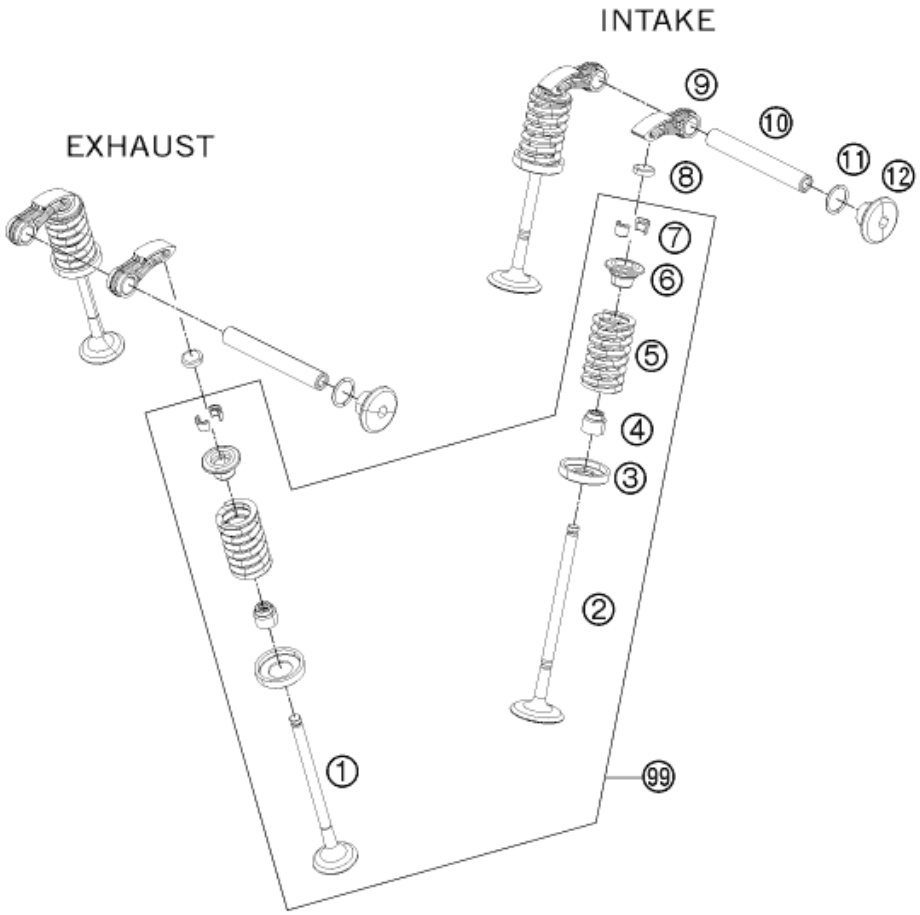

119013610

POS	PARTNUMBER	PARTNAME	PIECE
12	90136056001	SCREW PLUG	2
99	90136030010	VALVE KIT 125 DUKE 11-13	x

C119013610

* NEW PART

X ON DEMAND

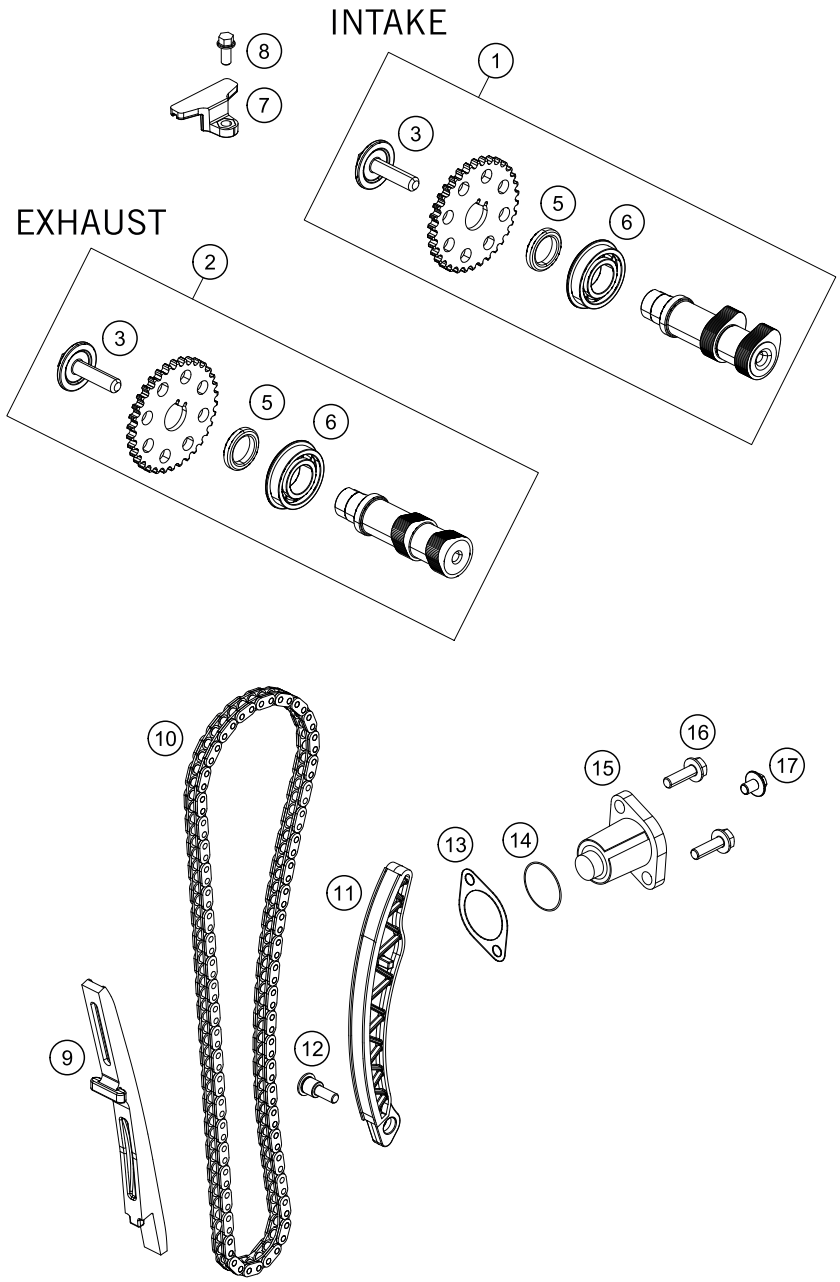

139013620

POS	PARTNUMBER	PARTNAME	PIECE
1	90136009133	CAMSHAFT INTAKE CPL.	1
2	90136010133	CAMSHAFT EXHAUST CPL.	1
3	90136009004	SPECIAL SCREW CAMSHAFT	2
5	90136009002	SPACER	2
6	90136009001	BALL BEAR.6003NR/C3D8 17X35X10	2
7	90136018000	GUIDE RAIL TOP	1
8	J025060143	HH COLLAR SCREW M6X14 SW8	1
9	90136001000	TIMING CHAIN GUIDE	1
10	90136013000	TIMING CHAIN	1
11	90136002000	TENSIONER RAIL	1
12	90130004007	SPECIAL SCREW 6X14,9	1
13	90136003003	GASKET CHAIN ADJUSTER	1
14	J770010015	O-RING 10,15X1,5	1
15	90136003000	CHAIN ADJUSTER	1
16	J025060206	HH COLLAR SCREW M6X20 SW10	2
17	90136003002	SPECIAL SCREW 6X6	1

C139013620

* NEW PART

X ON DEMAND

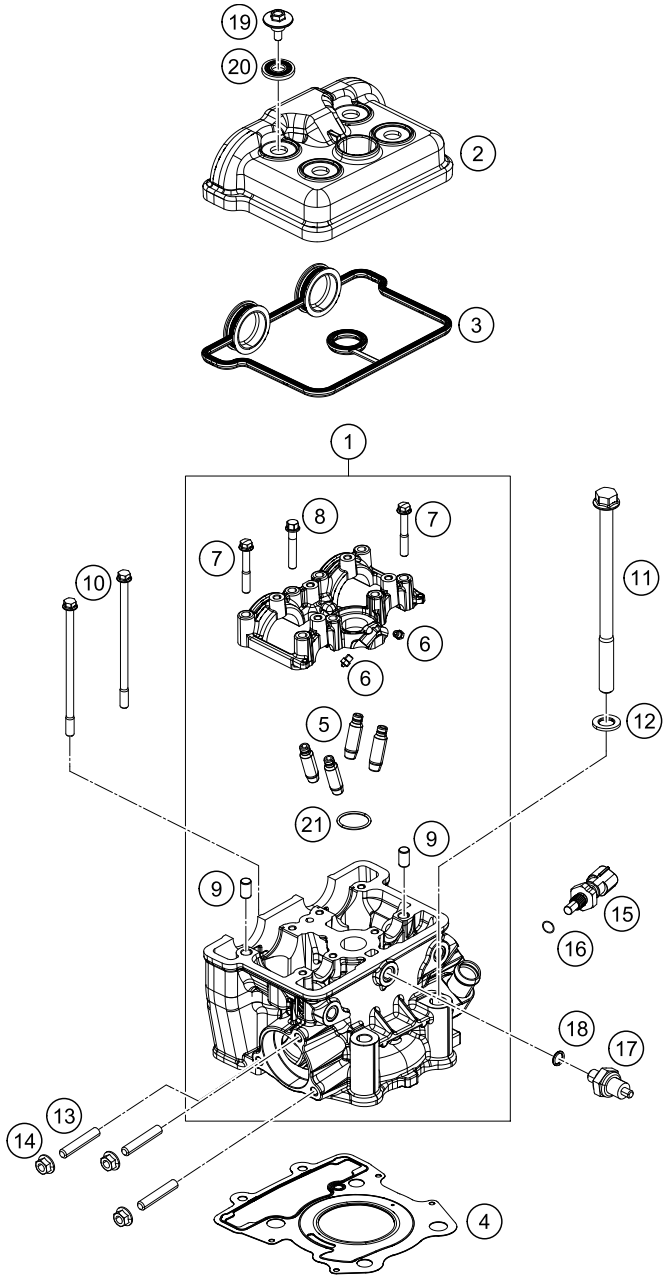

149013630

POS	PARTNUMBER	PARTNAME	PIECE
1	90136020190	CYLINDER HEAD WITH CAMHOLDER	1
2	90136052000	VALVE COVER	1
3	90136053000	VALVE COVER GASKET	1
4	90130036000	CYLINDER HEAD GASKET	1
5	90136025000	VALVE GUIDE	4
6	90130064000	OIL JET	4
7	J025060402	HH-COLLAR SCREW M6X40 WS10	2
8	J025060356	HH-COLLAR SCREW M6X35 WS8	6
9	90130024000	PIN DOWEL 8X6,4X14MM	2
10	90136020005	COLLAR SCREW M6	2
11	90136020003	HH COLLAR SCREW 10X147,5	4
12	90130080000	WASHER 11,2X20X2	4
13	90136020001	STUD M8	3
14	90136038000	FLANGED NUT M8 H7,5 WS12	3
15	90135047000	TEMPERATURE SENSOR	1
16	90135047001	O-RING	1
17	90138091000	OIL PRESSURE SENSOR	1
18	90138091001	O-RING	1
19	90136052020	VALVE COVER SCREW	4
20	90136052010	DECOUPLING ELEMENT	4
21	J770023019	O-RING 23,7X1,9	1

C149013630

* NEW PART

X ON DEMAND

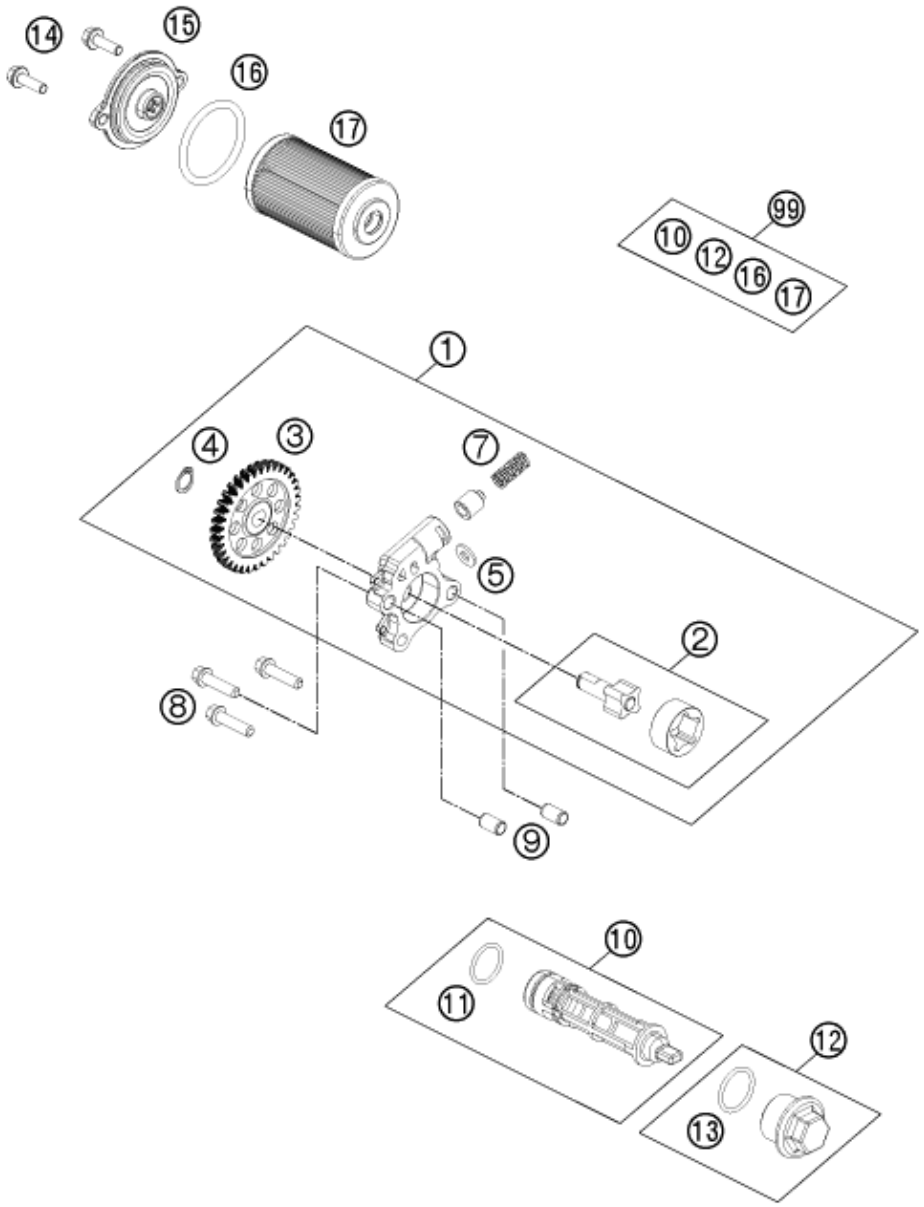

119013810

POS	PARTNUMBER	PARTNAME	PIECE
1	90138007133	OIL PUMP ASSY	1
2	90138002044	OIL PUMP SHAFT CPL.	1
3	90138001000	OIL PUMP GEAR	1
4	J471010100	SEEGERRING 10X1,0	1
5	90138010003	PLAIN WASHER	1
7	90138010002	SPRING OILPUMP	1
8	J028060303S	HH COLLAR SCREW M6X30 WS8	3
9	90130024000	PIN DOWEL 8X6,4X14MM	2
10	90238015033	MESH STRAINER CPL.	1
11	J770017721	O-RING 17,7X2,1 MM	1
12	90138015050	CLOSURE CAP OIL SCREEN	1
13	90138015052	O-RING	1
14	J025050166	HH COLLAR SCREW M5X16 SW8	2
15	90138015060	OIL FILTER COVER	1
16	J770039326	O-RING 39,34X2,62	1
17	90138015000	OIL FILTER	1
99	90138015010	OILFILTER SERVICE KIT 125 DUKE	x

C139013810

* NEW PART

X ON DEMAND

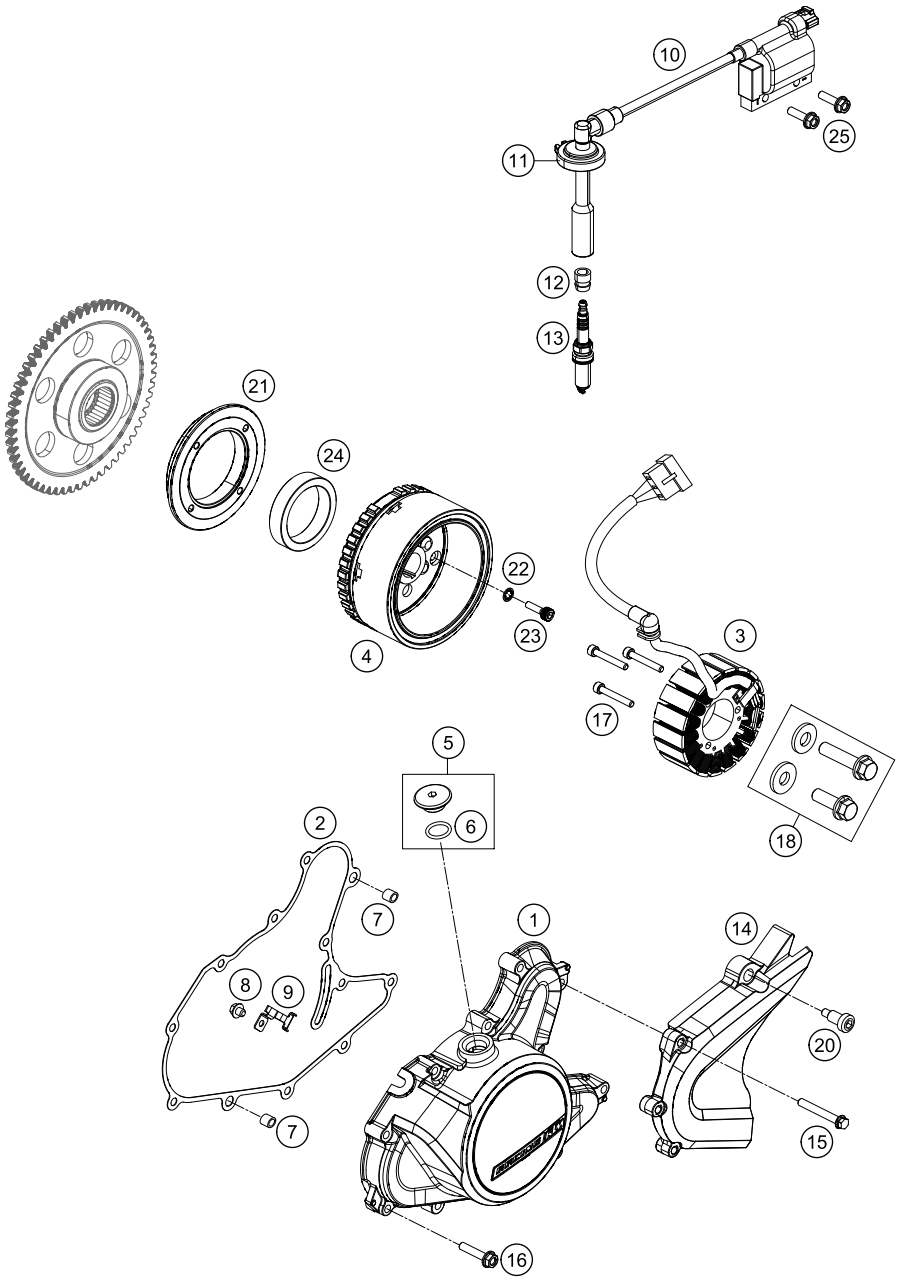

129063910

POS	PARTNUMBER	PARTNAME	PIECE
1	90130002000	IGNITION COVER	1
2	90130040000	IGNITION COVER GASKET	1
3	90139004000	STATOR CPL.	1
4	90139005100	ROTOR CPL.	1
5	90130002010	PLUG INCL. O-RING	1
6	J770015824	O-RING 15,8X2,4	1
7	90130024000	PIN DOWEL 8X6,4X14MM	2
8	J025060083S	HH COLLAR SCREW M6X8	1
9	90139004002	BRACKET F. STATORCABLE	1
10	90139090033	SPARK PLUG CONNECT. CPL.	1
11	90139090001	GASKET SPARK PLUG CONNECT.	1
12	90139093001	RUBBER GASKET SPARK PLUG	1
13	90239093000	SPARK PLUG M12X1,25	1
14	90103096000	CHAIN SPROCKET GUARD	1
15	J025060451	HH COLLAR SCREW M6X45	3
16	J025060301	HH COLLAR SCREW M6X30	9
17	J912050353S	AH SCREW M5X35 SELF LOCKING	3
18	90130018044	SCREW DRIVE GEAR KIT	1
20	90104060050	SPECIAL SCREW M6X24 ISK 6	1
21	90130001000	SUPPORT FREEWHEEL CLUTCH	1
22	90130001002	TOOTHED LOCK WASHER	4
23	90130001001	SOCKET HEAD SCREW M6X20	4
24	90140026000	FREEWHEEL CLUTCH	1
25	J025060209	HH COLLAR SCREW M6X20	2

C159063910

* NEW PART

X ON DEMAND

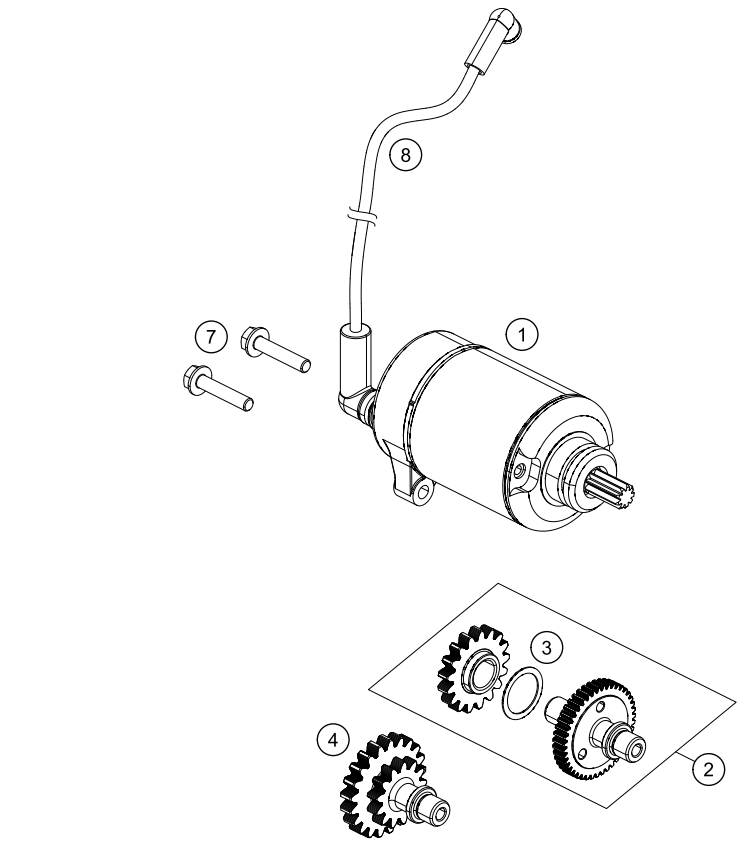

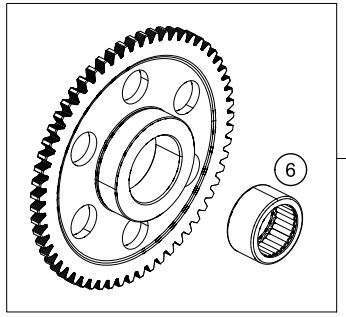

5

ACHTUNG !!! CAUTION !!!

FOR ROTOR 90139005000 Ø49mm USE FREEWHEEL 90140020000

FOR ROTOR 90139005100 Ø45mm USE FREEWHEEL 90640020000

POS	PARTNUMBER	PARTNAME	PIECE
1	90140001000	E-STARTER ENGINE CPL.	1
2	90140023033	TORQUE LIMITER CPL.	1
3	90140023060	SHIM 0,6 MM	1
3	90140023075	SHIM 0,75 MM	x
3	90140023090	SHIM 0,9 MM	x
4	90140022000	INTERMEDIATE STARTING GEAR	1
5	90640020000	FREEWHEEL GEAR CPL.	1
6	J618253216	NEEDLE ROLLER BEARING HK2516	1
7	J025060256	HH COLLAR SCREW M6X25 SW10	2
8	90111059000	STARTER CABLE	1

119014010

C159064010

* NEW PART

X ON DEMAND

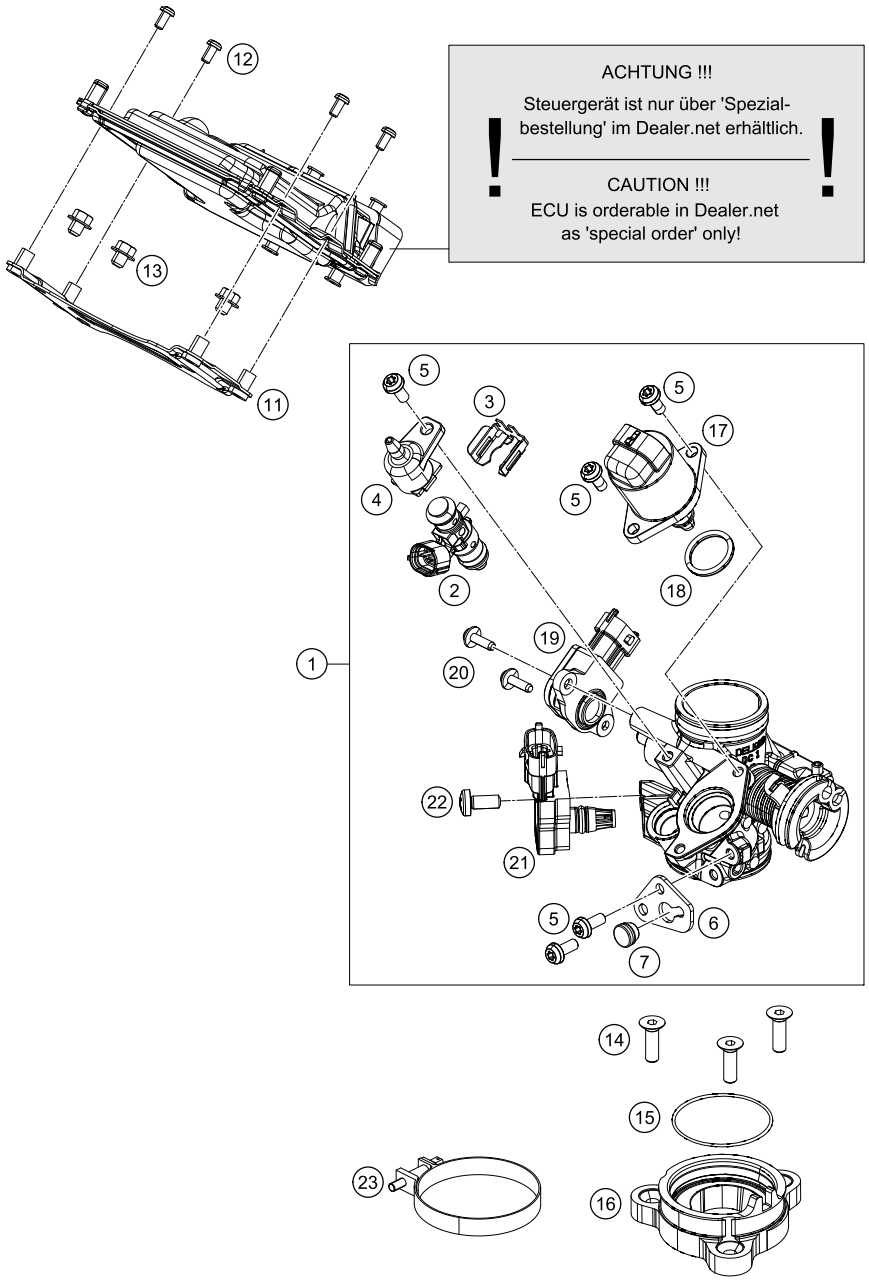

119014110

POS	PARTNUMBER	PARTNAME	PIECE
1	90141001000	THROTTLE BODY CPL.	1
2	90141023000	FUEL INJECTOR	1
3	90141023001	CLAMP F. INJECTOR	1
4	90141023004	CONNECTOR FUEL RAIL	1
5	90141023005	SPECIAL SCREW M5X12	5
6	90141023002	CABLE SUPPORT	1
7	90141023003	GROMMET	1
11	90141029000	BRACKET TIMING CHARGER	1
12	J005040081	FLAT HEAD SCREW M4X8 PH	4
13	J027050063	HH COLLAR SCREW M5X6 SW8	3
14	J991060203S	COUNTERSUNK SCREW M6X20	3
15	90141002006	O-RING CONN. FL. CYL.-THR.BODY	1
16	90141002000	CONN. FLANGE CYLINDER-THR.BODY	1
17	90641072000	IDLE ADJUSTER	1
18	90141072001	O-RING	1
19	90141070000	THROTTLE POSITION SENSOR	1
20	90141070001	SPECIAL SCREW M4X13	2
21	90141071000	TMAP-SENSOR	1
22	90141071001	SPECIAL SCREW M6X14	1
23	90641002010	CLAMP	1

C149014110

* NEW PART

X ON DEMAND

WWW.KTM.COM

KTM Sportmotorcycle GmbH
5230 Mattighofen, Austria
www.ktm.com

KTM_POWERPARTS KTM_POWERWEAR KTM_ORIGINAL SPARE PARTS

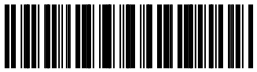

3CM0812000EN

Art. Nr.: 3CM0812000EN 16. Apr 2015