250 EXC EUR/AUS 2006

SPARE PARTS MANUAL: ENGINE

ART.NO.: 3CM083680EN

ENGLISH

INDEX

SPECIAL TOOLS

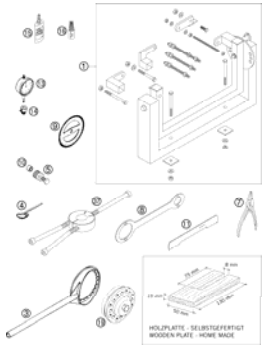

3

ENGINE CASE

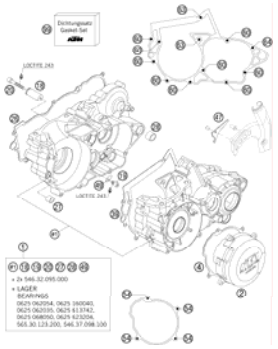

4

REED VALVE CASE

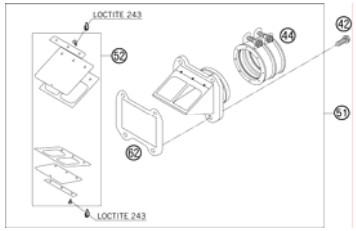

5

CLUTCH COVER

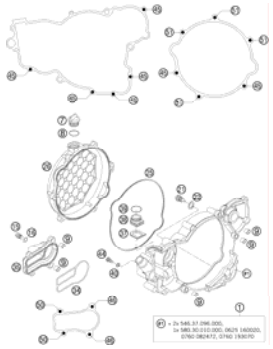

6

CRANKSHAFT, PISTON

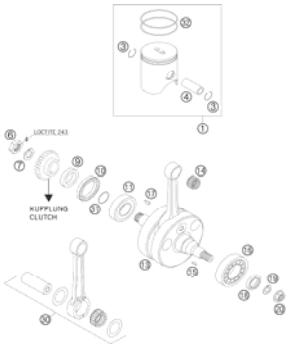

7

CYLINDER, CYLINDERHEAD

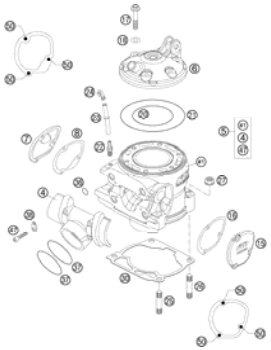

8

CARBURETOR KEIHIN

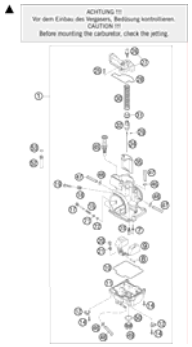

9

CLUTCH

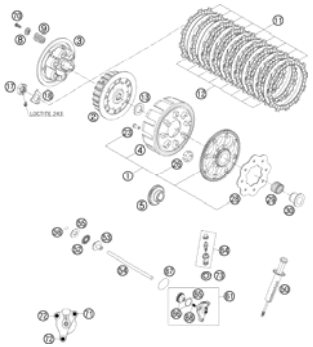

11

KICKSTARTER

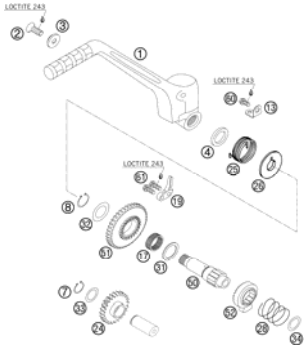

12

TRANSMISSION I

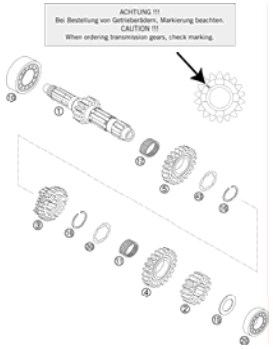

13

TRANSMISSION II

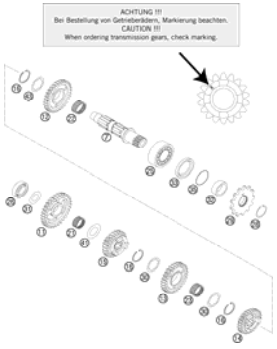

14

SHIFTING MECHANISM

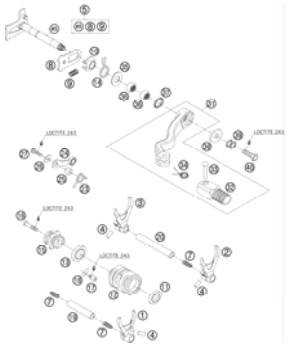

15

COOLING SYSTEM

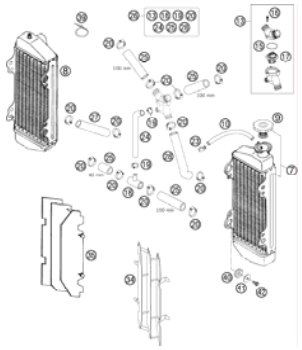

16

EXHAUST CONTROL

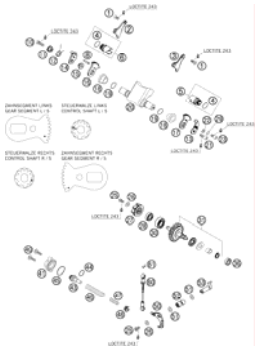

17

IGNITION SYSTEM

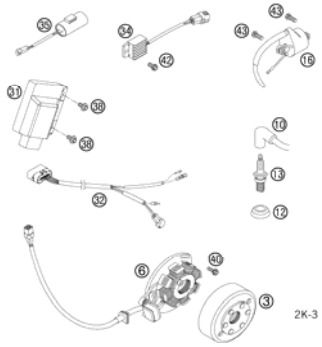

19

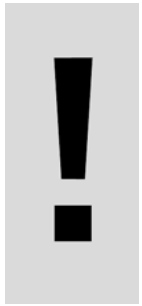

All information contained is without obligation. KTM-Sportmotorcycle AG particularly reserves the right to modify any equipment, technical specifications, prices, colors, shapes, materials, services, service work, constructions, equipment and the like so as to adapt them to local conditions or to cancel any of the above items, all without previous announcement and without giving reasons. KTM may stop manufacturing certain models without previous notice. KTM shall not be held liable for any deviations of availability and/or ability to deliver, illustrations, descriptions, printing and/or other errors. The illustrated models partly contain extra equipment, which is not applied to standard models.
© 2004 by KTM-SPORTMOTORCYCLE AG, Mattighofen AUSTRIA; All rights reserved; Reprint, also in extracts, with written allowance of KTM-SPORTMOTORCYCLE AG, Mattighofen only.

SPECIAL TOOLS

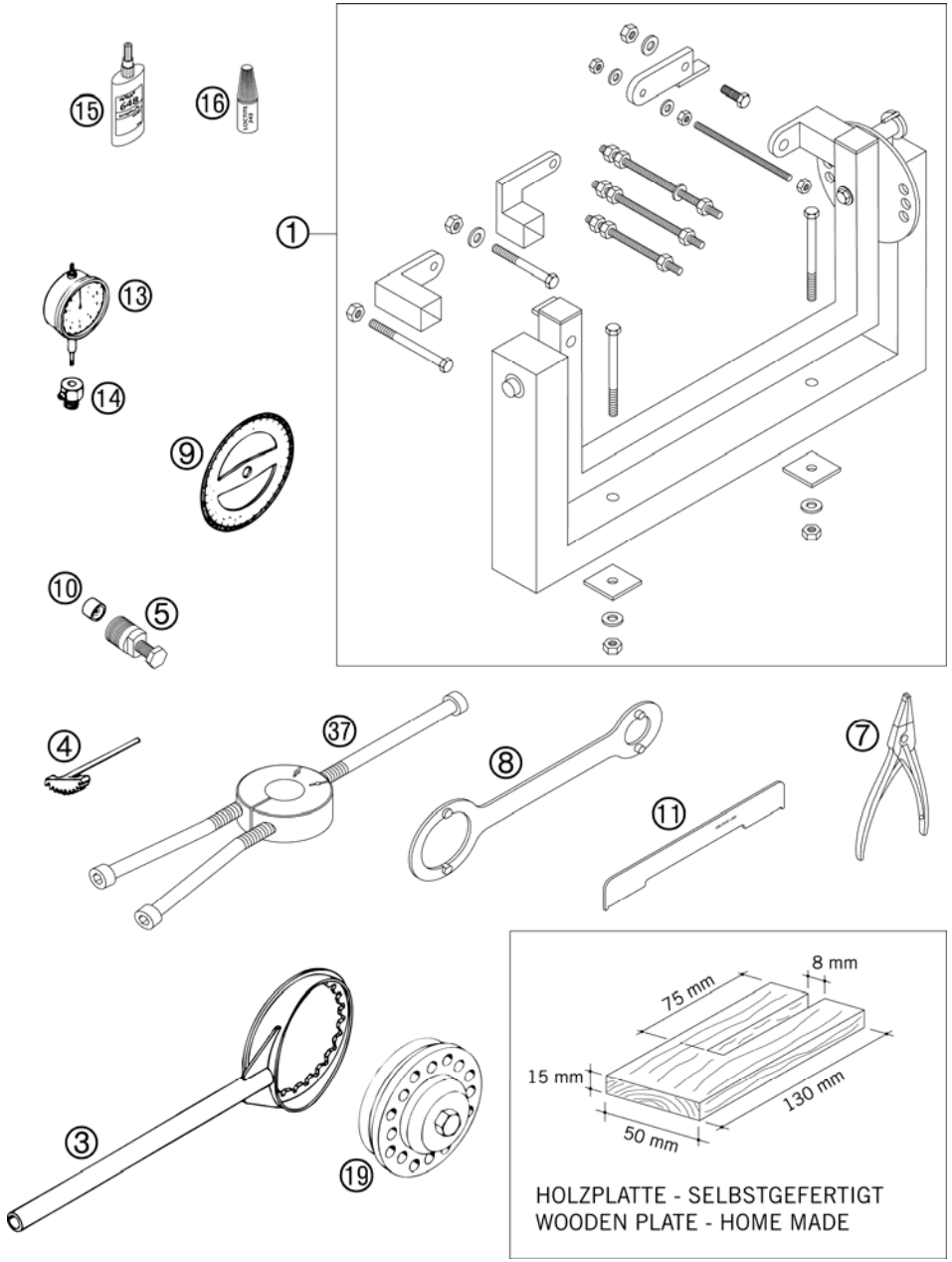

FIG	PART NUMBER	DESCRIPTION	QTY
1	56012001044	UNIVERSAL MOUNTING RACK CPL.	1
3	54629003000	CLUTCH HOLDER 250 '90	1
4	56012004000	GEAR WHEEL SEGMENT	1
5	54629009044	MAGNETIC PULLER M 27X1 KOKUSAN	1
7	51012011000	SPECIAL CIRCLIP PLIER	1
8	54629012100	HOLD. SPANNER ROTOR 2K-1/2/3/4	1
9	51012014000	TIMING DEGREE DISC	1
10	51012016000	PROTECTION CAP CRANKSHAFT M12	1
11	54829001000	ADJUSTING PLATE 250 03	1
13	50112013000	DIAL GAUGE 0-10MM	1
14	50112030000	DIAL GAUGE SUPPORT	1
15	58429059000	LOCTITE 648 GREEN 24ML	1
16	6899785	LOCTITE 243 BLUE 6CCM	1
19	54629027000	RIVETTING TOOL FOR CLUTCH	1
37	58429037043	MOUNTING TOOL F.BEARING NJ 207	1

05548290 / C065482900

* NEW PART

X AS REQUIRED

ENGINE CASE

250 EXC EUR/AUS 2006

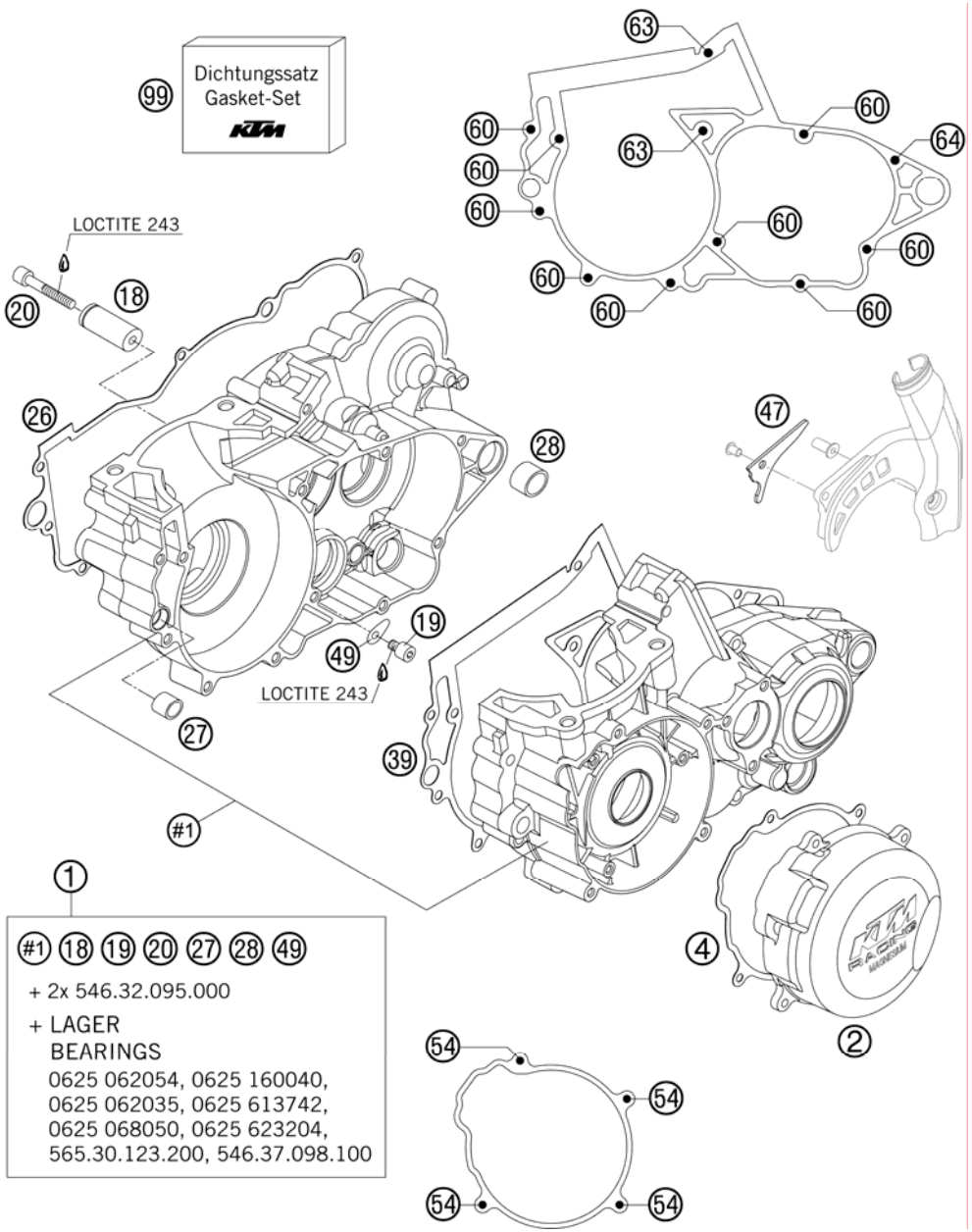

FIG	PART NUMBER	DESCRIPTION	QTY
1	54830000044	ENGINE CASE CPL. WITH BEAR. 03	1
2	54830002000	IGNITION COVER 250/300 04	1
4	54830040000	IGNITI.COVER GASKET 250/300 03	1
18	59033018000	BUSHING PIN 2000	1
19	0912060083	AH SCREW DIN0912-M 6X 8	1
20	0912060404	AH SCREW DIN0912-M 6X40 A2	1
26	54830024000	CLUTCH COVER GASKET 2003	1
27	54630027000	DOWEL BUSHING 13,8X11X12	1
28	54830027000	DOWEL 21X12 03	1
39	54830039000	ENGINE CASE GASKET 2003	1
47*	54830047100	CHAIN FAIL. PROTECTION 06	1
49	54634049000	RETAINING PLATE	1
54	0014050163	HH COLLAR SCREW M 5X16 WS=6	4
60	0015060403	HH COLLAR SCREW M 6X40 WS=8	9
63	0015060553	HH COLLAR SCREW M 6X55 WS=8	2
64	0015060603	HH COLLAR SCREW M 6X60 WS=8	1
99	54830099000	GASKET SET 250/300 2003	1

065483001 / C065483001

* NEW PART

X AS REQUIRED

REED VALVE CASE

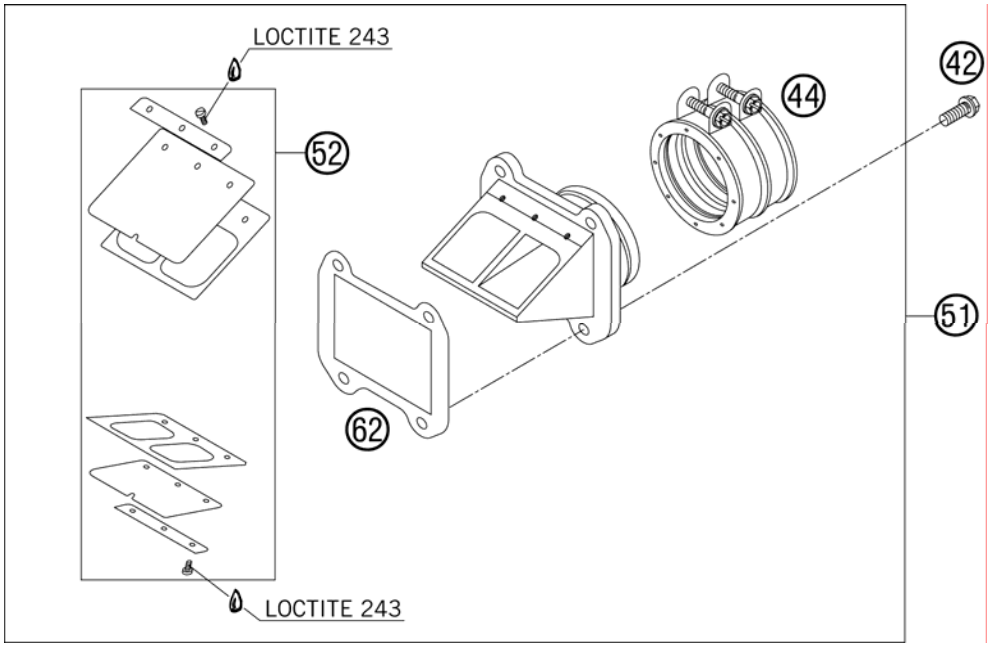

FIG	PART NUMBER	DESCRIPTION	QTY
42	0015060163	HH COLLAR SCREW M 6X16 WS=8	4
44	54736044000	RUBBER BOOT CPL. BOYESEN 2002	1
51	54830051044	REED VALVE ASSY BOYESEN CPL.03	1
52	54730052000	REED VALVE CPL. BOYESEN 02	1
62	54830062100	GASKET REED VALVE CASE 04	1

065483003 / C065483003

* NEW PART

X AS REQUIRED

CLUTCH COVER

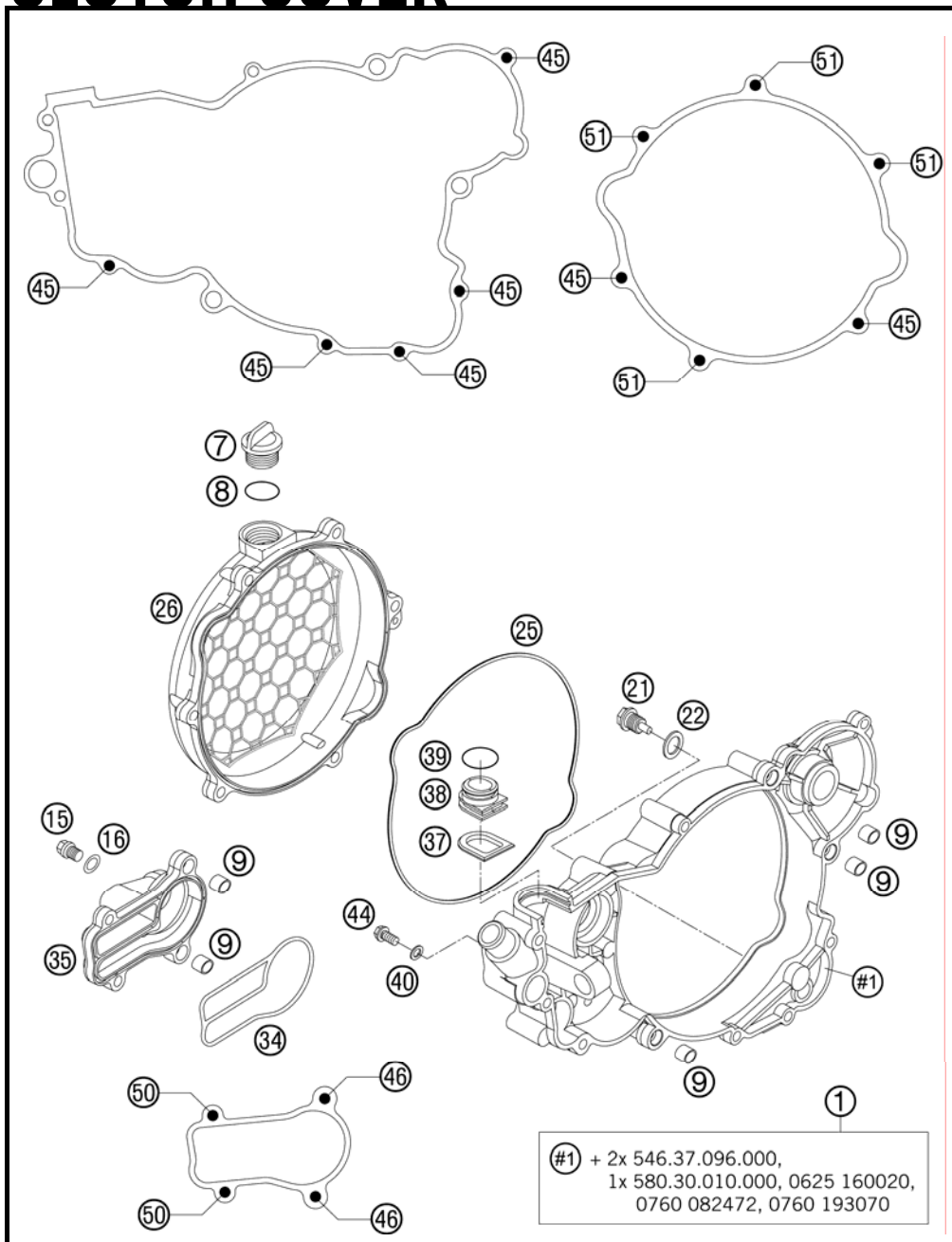

FIG	PART NUMBER	DESCRIPTION	QTY
1	54830001044	INTERM. CLUTCH COVER CPL. 03	1
7	58030020000	PLUG M 24X3	1
8	0770191015	O-RING 19,00X3,00 NBR	1
9	49030090000	DOWEL 9,8 X 7 X 10	5
15	0910100003	PLUG DIN0910-M 10X1	1
16	0603100141	COPPER GASKET DIN7603-10X14X1	1
21	58030021000	OILDRAIN PLUG W.MAG. M 12X1,5	1
22	58038022000	CU-SEAL RING DIN7603-12X18X1,5	1
25	54830025000	GASKET F. CLU.COVER 250/300 03	1
26	5483002600098	CLUTCH COVER OUTSIDE 03	1
34	54835003000	GASKET WAPU-COVER 250 2003	1
35	54835001000	WATERPUMP COVER 250/300 03	1
37	54637107000	SEALING ELEMENT BOTTOM	1
38	54837091000	SEALING CARRIER 03	1
39	0770021160	O-RING 18,72X2,62	1
40	0603061001	CU-SEAL RING DIN7603-6X10X1	1
44	0015060123	HH COLLAR SCREW M 6X12 WS=8	1
45	0015060203	HH COLLAR SCREW M 6X20 WS=8	7
46	0015060253	HH COLLAR SCREW M 6X25 WS=8	2
50	0015060553	HH COLLAR SCREW M 6X55 WS=8	2
51	0015060603	HH COLLAR SCREW M 6X60 WS=8	4

05548304 / C065483004

* NEW PART

X AS REQUIRED

CRANKSHAFT, PISTON

250 EXC EUR/AUS 2006

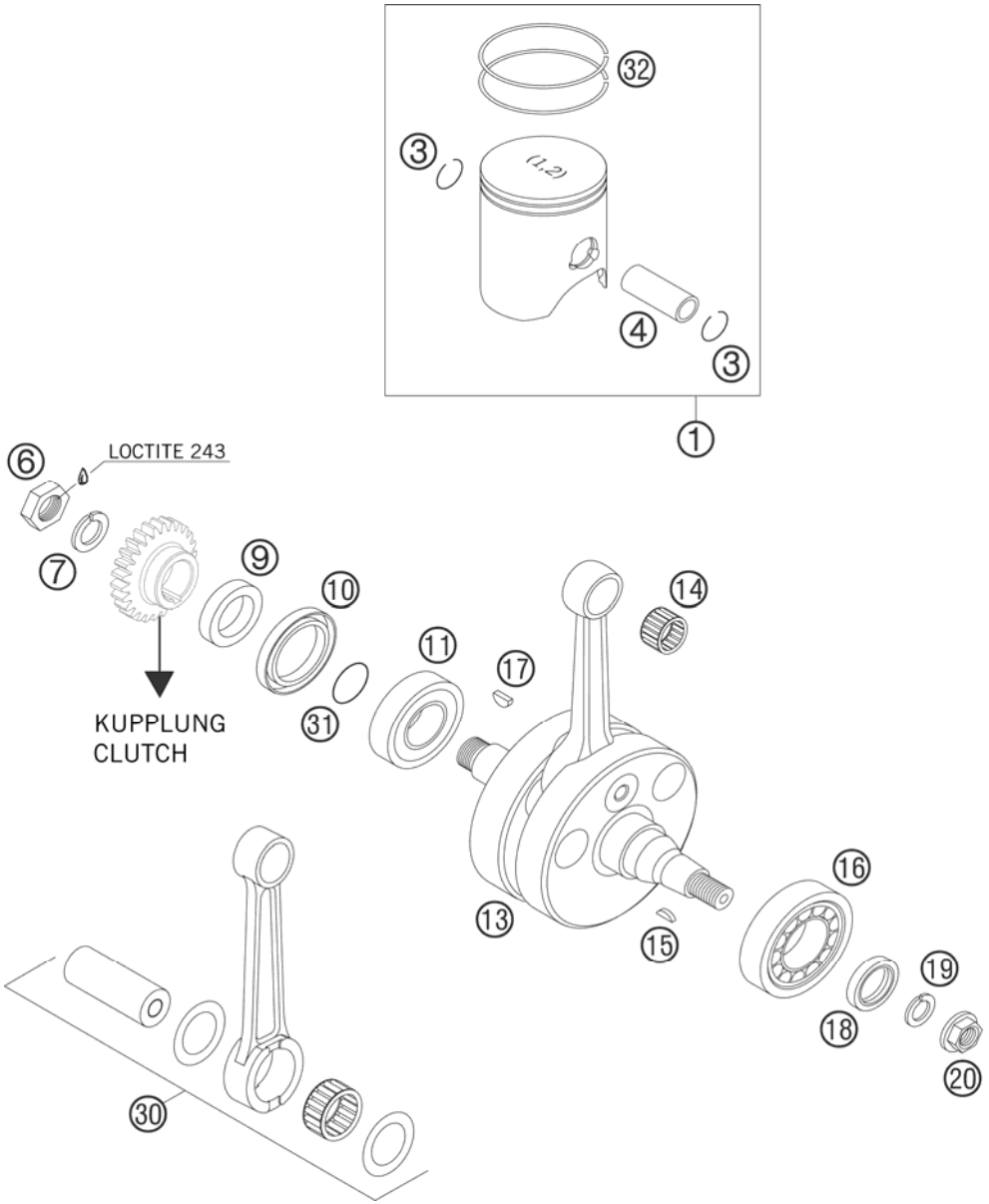

FIG	PART NUMBER	DESCRIPTION	QTY
1*	54830007200 I	PISTON CPL. 250 2 RINGS 05	1
1*	54830007200 II	PISTON CPL. 250 2 RINGS 05	1
3	54030074000	WIRE LOCK RING C18X1,5	2
4*	54830233000	PISTON PIN	1
6	54630029000	HEX.NUT L/SH M18X1,5	1
7	58132072000	LOCK WASHER VSK 18	1
9	54830016000	SPACER SLEEVE 28X38X10 03	1
10	0760385273	SHAFT SEAL RING 38X52X7BTSL	1
11	0625623204	BALL BEARING 32X65X17 NTN	1
13*	54830118100	CRANKSHAFT 250/300 06	1
14	54430034000	NEEDLE BEARING KBK 18X22X20	1
15	0888030050	WOODRUFF KEY DIN6888-3X5X13	1
16	56530123200	CYLIND.ROL.BEAR. NJ207ET2XCS42	1
17	6946005	WOODRUFF KEY 5X6,5 HARDED	1
18	0760253570	SHAFT SEAL RING 25X35X7 BTSL	1
19	50230029012	LOCKING RING VSK 12	1
20	49030021000	COLLAR NUT M12X1 R/S	1
30	54830015044	CONROD REP. KIT 250/300	1
31	0770250015	O-RING 25,00X1,50 NBR 70	1
32	54630232000	SQUARE RING 66,4MM 250 2000	2

065483009 / C065483006

* NEW PART

X AS REQUIRED

CYLINDER, CYLINDERHEAD

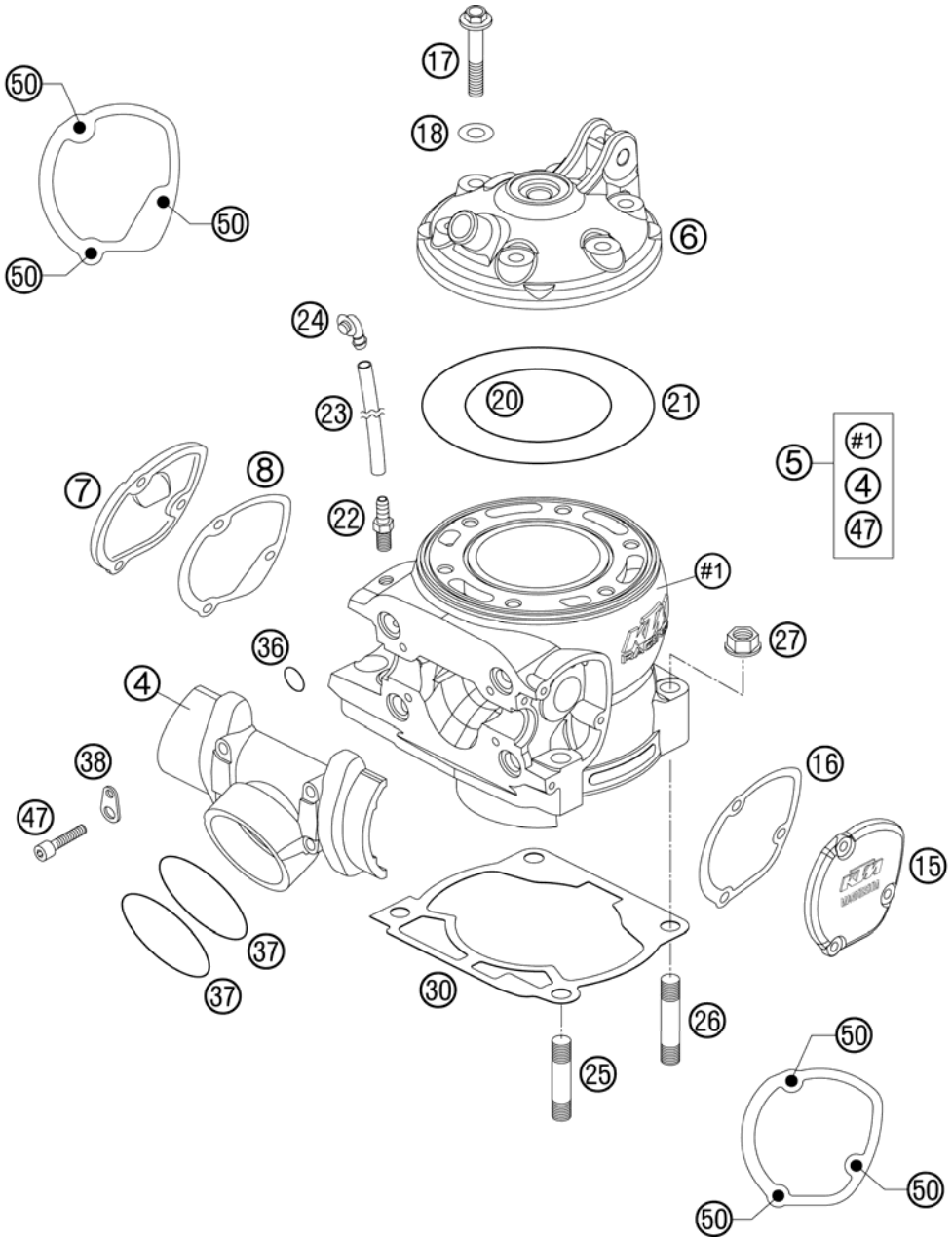

FIG	PART NUMBER	DESCRIPTION	QTY
4*	54830001100	INTERMEDIATE FLANGE	1
5*	54830005244	CYLINDER CPL. W. FLANGE 250 06	1
6*	54830006300	CYLINDER HEAD 250 EXC 06	1
7	5473700700098	CONTROL COVER R/S 2001	1
8	54737008000	GASKET FOR CONTROL COVER R/S	1
15	5473700500098	CONTROL COVER L/S 2001	1
16	54737006000	GASKET FOR CONTROL COVER L/S	1
17	54830079000	COLLAR SCREW M 8X35 WS=13	6
18	56530080000	CU-SEAL RING 8 X 16 X 1	6
20	0770760021	O-RING 76,00X2,00 VITON	1
21	0770114020	O-RING 114,00X2,00 SILICONE	1
22	58336020090	VACUUM CONNECTION M 6X1	1
23	31007107001	PVC-HOSE 6X9 MM PER METER	x
24	50303089000	ANGEL PIECE '97	1
25	0835100351	STUD DIN0835-M10X35	2
26	0835100403	STUD DIN0835-M10X40	2
27	54630044000	COLLAR NUT M10 WS=13	4
30	54830030002	GASKET CYLINDER BASE 0,2MM 03	x
30	54830030004	GASKET CYLINDER BASE 0,4MM 03	x
30	54830030005	GASKET CYLINDER BASE 0,5MM 03	x
30	54830030075	GASKET CYLINDER BASE 0,75MM 03	x
36	0770116241	O-RING 11,3 X2,4 SILICON	4
37	0770440030	O-RING 44,00X3,00 VITON	2
38	51005074000	RETAINING PLATE	2
47	0912060303	AH SCREW DIN0912-M 6X30	4
50	0014050123	HH COLLAR SCREW M 5X12 WS=6	6

065483007 / C065483008

* NEW PART

X AS REQUIRED

CARBURETOR KEIHIN

ACHTUNG !!!
Vor dem Einbau des Vergasers, Bedüsung kontrollieren.
CAUTION !!!
Before mounting the carburetor, check the jetting.

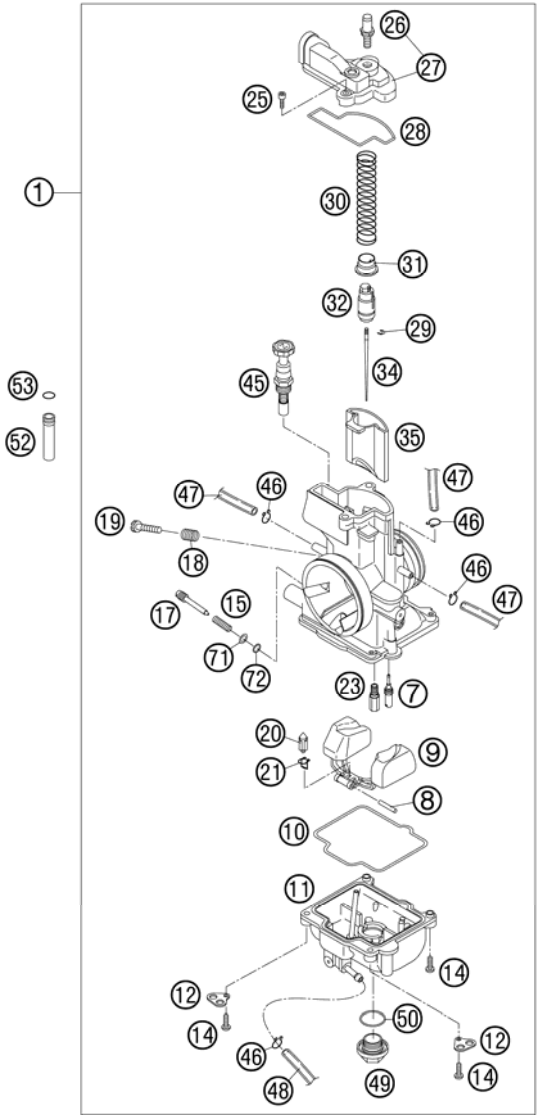

FIG	PART NUMBER	DESCRIPTION	QTY
1	54831101244	CARBURETOR PWK36-S AG 06	1
7	54531607035	IDLE JET 35 KEIHIN	x
7	54531607038	IDLE JET 38 KEIHIN	x
7	54531607040	IDLE JET 40 KEIHIN	x
7	54531607042	IDLE JET 42 KEIHIN	x
7	54531607045	IDLE JET 45 KEIHIN	x
7	54531607048	IDLE JET 48 KEIHIN	x
7	54531607050	IDLE JET 50 KEIHIN	x
8	57331008000	ARM PIN FLOAT	1
9	57331009000	FLOAT CPL.	1
10	54831010000	GASKET FLOAT CHAMBER	1
11	54831011000	FLOAT CHAMBER PWK38-S AG	1
12	54531612100	RETAINING PLATE FOR BLEEDER	2
14	0016040163	HH COLLAR SCREW M 4X16 WS=6	4
15	54531615000	SPRING FOR ADJUSTMENT SCREW	1
17	54531617000	ADJUSTMENT SCREW	1
18	54631118000	SPRING	1
19	54631219100	ADJUSTMENT SCREW M 5	1
20	54631020000	FLOAT VALVE CPL. PWK 38 AG PJ	1
21	54531621000	CLAMP	1
23	54531623150	MAIN JET 150 KEIHIN	x
23	54531623152	MAIN JET 152 KEIHIN	x
23	54531623155	MAIN JET 155 KEIHIN	x
23	54531623158	MAIN JET 158 KEIHIN	x
23	54531623160	MAIN JET 160 KEIHIN	x
23	54531623162	MAIN JET 162 KEIHIN	x
23	54531623165	MAIN JET 165 KEIHIN	x
23	54531623168	MAIN JET 168 KEIHIN	x
23	54531623170	MAIN JET 170 KEIHIN	x
23	54531623172	MAIN JET 172 KEIHIN	x
23	54531623175	MAIN JET 175 KEIHIN	x
25	54831025000	SPECIAL-AH-SCREW M 4X12	2
26	54831029000	THROTTLE CALBE HOLDER M6X0,75	1
27	54831127000	CARBURETOR COVER PWK36-S AG	1
28	54831028000	GASKET FOR CARBURETOR COVER	1
29	54531629000	CLIP FOR JET NEEDLE	1

05548310 / C065483101

* NEW PART

X AS REQUIRED

CARBURETOR KEIHIN

ACHTUNG !!!
Vor dem Einbau des Vergasers, Bedüsung kontrollieren.
CAUTION !!!
Before mounting the carburetor, check the jetting.

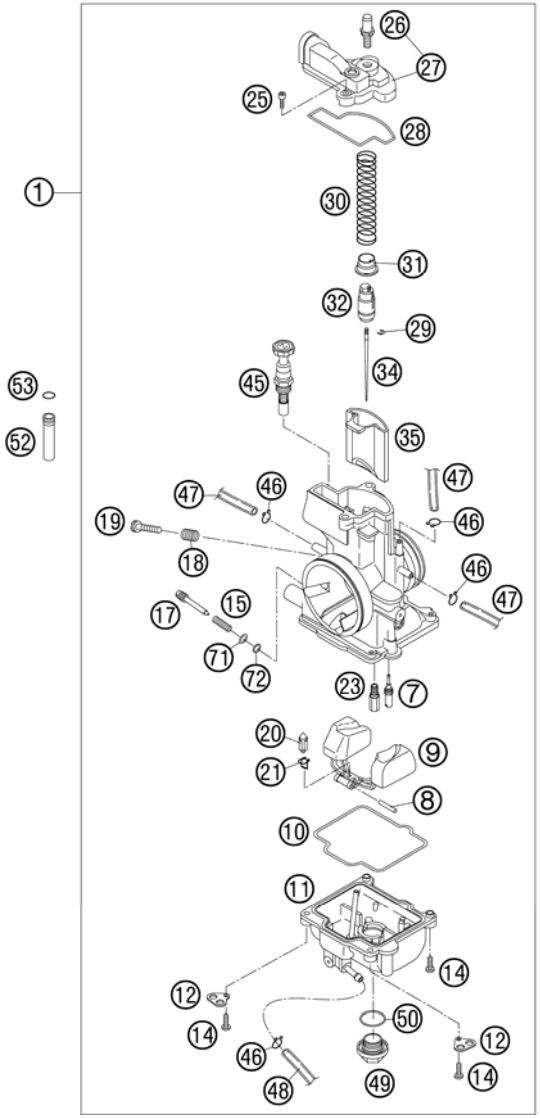

FIG	PART NUMBER	DESCRIPTION	QTY
30	54831030000	SLIDING SPRING	1
31	54631231000	SPRING CAP	1
32	54631232000	NIPPLE	1
34*	54831035000	JET NEEDLE KEIHIN N8RF 06	x
34*	54831035100	JET NEEDLE KEIHIN N8RG 06	x
34*	54831035300	JET NEEDLE KEIHIN N8RE 06	x
34*	54831035400	JET NEEDLE KEIHIN N8RH 06	x
35	54631035000	THROTTLE VALVE 7 FOR 38 PJ '00	1
45	54631245000	STARTER PISTON CPL.	1
46	54531696000	CLAMP 6 MM	5
47	31007007101	PVC-HOSE 4X6MM	2
48	52031137001	PVC-HOSE 3X5MM	x
49*	54531699000	PLUG M 18X1	1
50	0770180230	O-RING 18,00X2,30 NBR 70	1
52	50331029038	SLIDE STOP L=38MM	x
53	0770060018	O-RING 6,00X1,78	x
71	54831071000	WASHER ADJUSTING SCREW	1
72	54831072000	O-RING ADJUSTING SCREW	1

05548310 / C065483101

* NEW PART

X AS REQUIRED

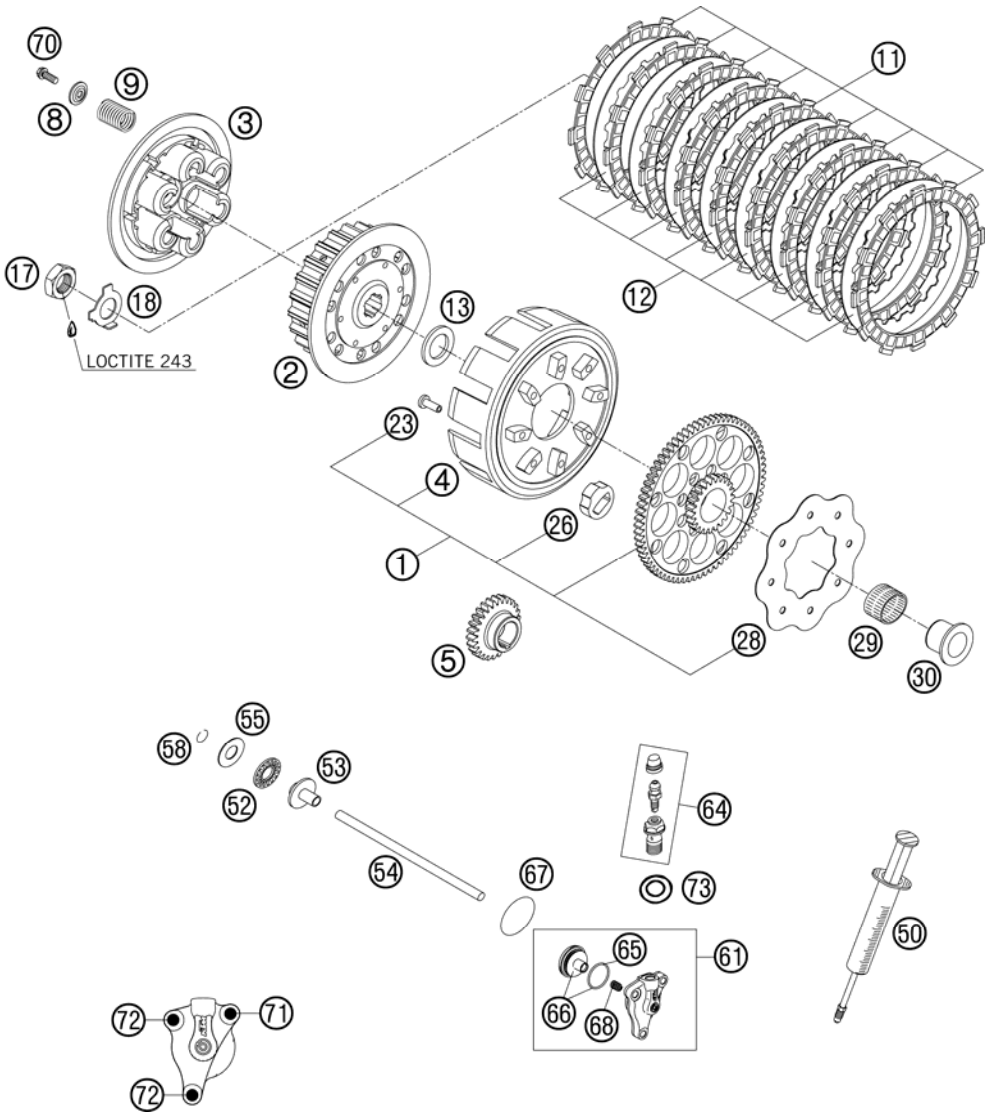

FIG	PART NUMBER	DESCRIPTION	QTY
1	54832001072	OUTER CLUTCH HUB 72-T CPL. 03	1
2	54832002000	INNER CLUTCH HUB 546/548 2003	1
3	54632003000	PRESSURE CAP 250-380 '98	1
4	54832001000	OUTER CLUTCH HUB LOOSE 2003	1
5	54832000026	PRIMARY GEAR 26T 2003	1
8	58132081000	SPRING RETAINER 6,2 X 20 X 3,2	6
9	54832080000	CLUTCH SPRING 2,5X43 8,75T	6
11	54832011000	LINING DISC FCC 04	9
12	54832012000	STEEL DISC 1,2 MM	8
13	57532013000	SUPPORTWASHER 22,2X35X3 HARDE.	1
17	0936181505	HEXAGON NUT DIN0936-M18X1,5 R.	1
18	56532018000	LOCK WASHER	1
23	0733060150	CLUTCH RIVET DIN7338- 6X15	8
26	58132026000	DAMPING ELEMENT	8
28	58132028000	RETAINING PLATE	1
29	56532095000	NEEDLE BEARING K26X30X22ZW.KSE	1
30	50332070000	INNER RING WITH COLLAR	1
50	50329050000	VENT INJEKTION HYDR. CLUTCH	1
52	54637097200	AXIAL NEEDLE BEARING AXK 1226	1
53	50332054051	PRESSURE PIECE 125-380 '98	1
54	54832054000	PUSH ROD 250 2003	1
55	54637098200	AXIAL WASHER AS1226 12X26X1	1
58	0993012000	CIRCLIP DIN7993-RW12	1
61*	54832061044	OUTPUT CYLINDER CPL. 06	1
64	54813020000	BLEEDER HOLLOW SCREW M10X1	1
65*	54832067000	O-RING	1
66*	54832066000	PISTON CPL.	1
67	0770300015	O-RING 30,00X1,50 NBR 70	1
68*	54832069000	PRESSURE SPRING	1
70	0015060163	HH COLLAR SCREW M 6X16 WS=8	6
71	0015060353	HH COLLAR SCREW M 6X35 WS=8	1
72	0015060203	HH COLLAR SCREW M 6X20 WS=8	2
73	42013226000	CU-SEAL RING DIN7603-10X16X1	2

065483200 / C065483200

* NEW PART

X AS REQUIRED

KICKSTARTER

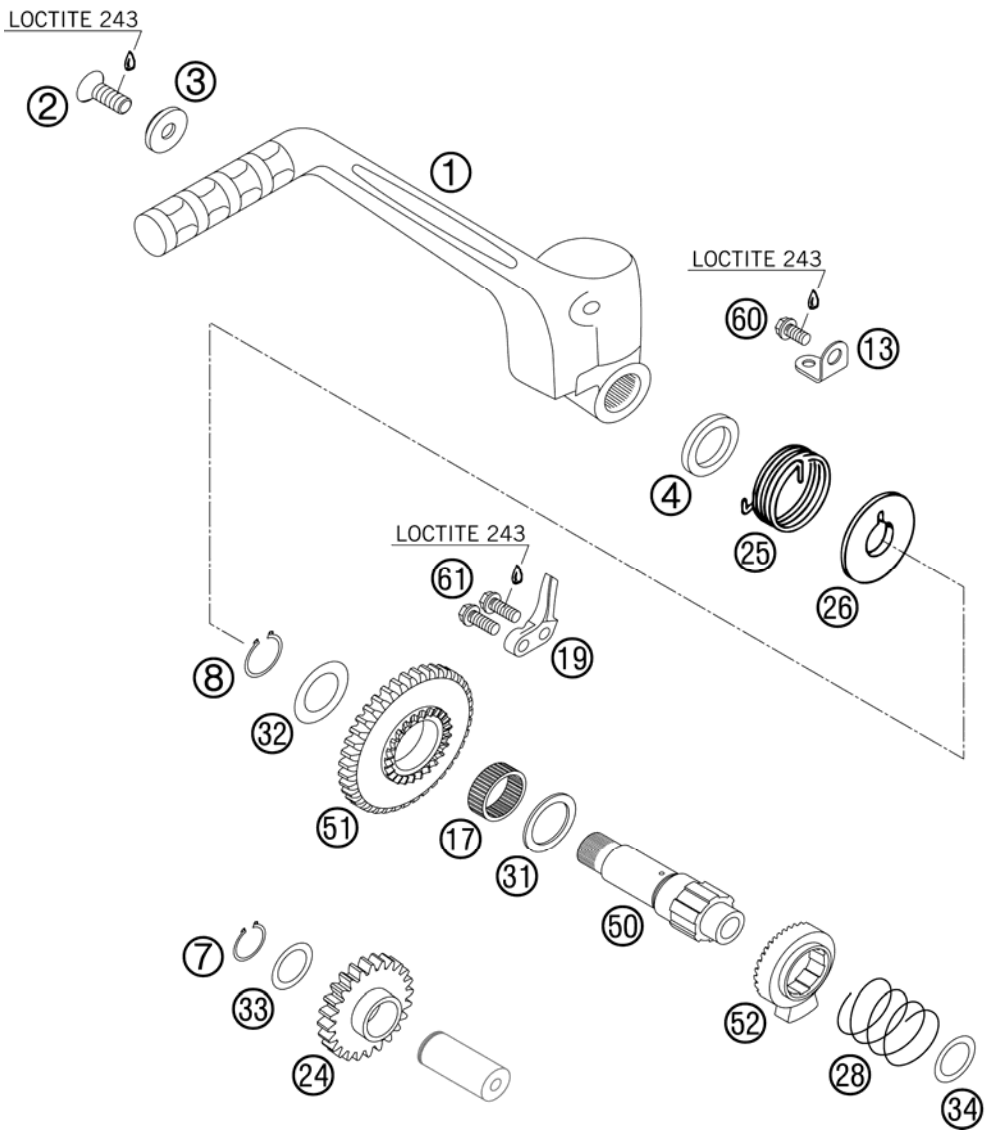

FIG	PART NUMBER	DESCRIPTION	QTY
1	54833070044	KICKSTARTER CPL. '03	1
2	54610052000	SPROCKET SCREW-AH M8X20 WS=6	1
3	54633037000	WASHER 8MM GALVANIZED	1
4	0760193070	SHAFT SEAL RING 19X30X7 B	1
7	0471170010	CIRCLIP DIN0471-17X1	1
8	0471190120	CIRCLIP DIN0471-19X1,2	1
13	54633074000	SPRING HANGER	1
17	0405222610	NEEDLE BEARING K 22X26X10 A	1
19	59033069000	BUMP PART	1
24	54833024000	INTERMEDIATE GEAR 2003	1
25	54633025000	KICKSTARTER SPRING	1
26	54633026000	DRIVING HUB	1
28	58033028000	RATCHET GEAR SPRING 1,2 MM	1
31	58033031000	STOP DISK 22,2 X 30 X 1,5	1
32	59033080000	SHIM 20X32X1	1
33	54633090000	STOP DISK 17,2X25X1	1
34	0988172405	SHIM WASHER DIN0988-17X24X0,5	1
50	59033050000	KICKSTARTER SHAFT RACING 2000	1
51	54833051034	KICKSTARTER GEAR 34-T 03	1
52	59033052000	RATCHET GEAR KICKSTARTER	1
60	0015060103	HH COLLAR SCREW M 6X10 WS=8	1
61	0015060203	HH COLLAR SCREW M 6X20 WS=8	2

05548330 / C065483300

* NEW PART

X AS REQUIRED

TRANSMISSION I

ACHTUNG !!!
Bei Bestellung von Getrieberädern, Markierung beachten.
CAUTION !!!
When ordering transmission gears, check marking.

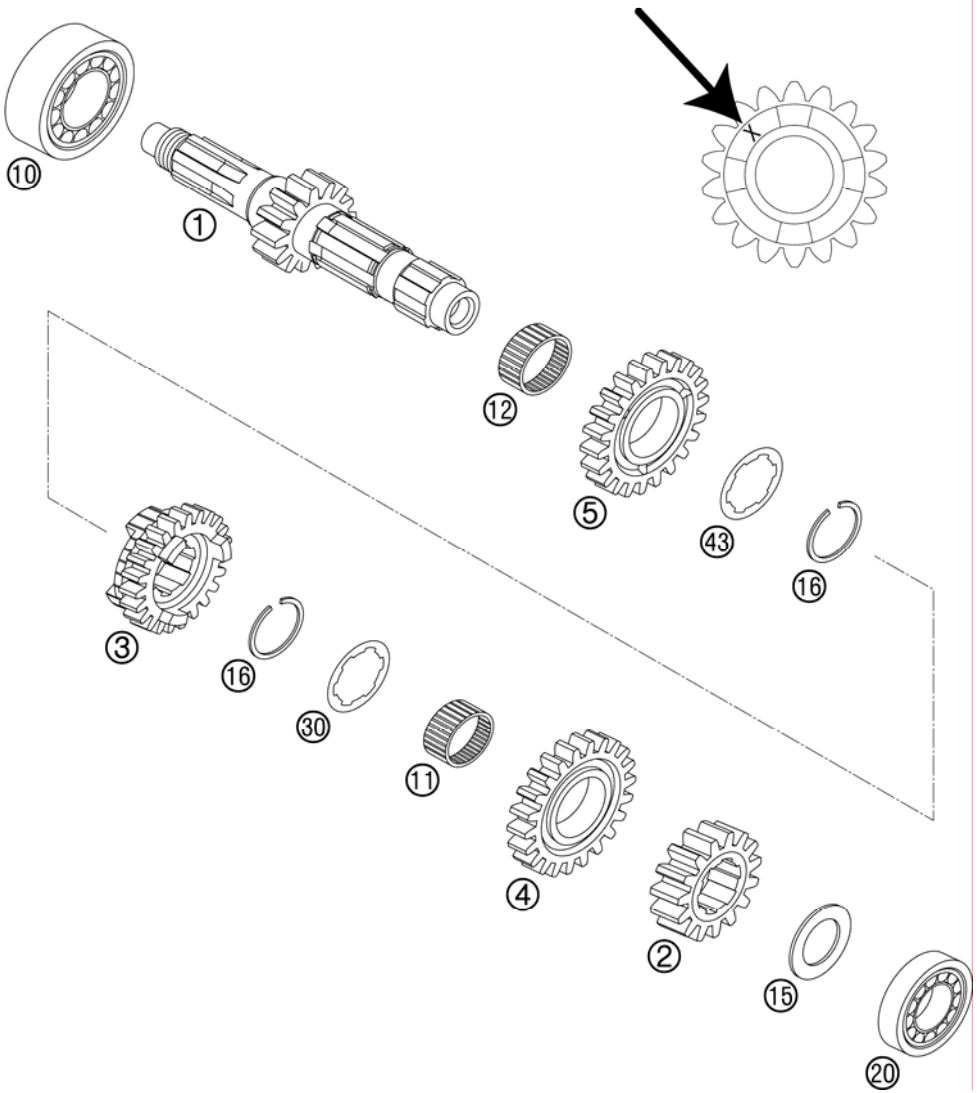

FIG	PART NUMBER	DESCRIPTION	QTY
1	54833101000	MAIN SHAFT 14-T "1E14" 04	1
2	54833102000	SOLID GEAR 2ND G. 17-T "2E17"	1
3	54833103000	SLIDING GEAR 3RD G.19-T "3E19"	1
4	54833104000	IDLER GEAR 4TH G. 20-T "4E20"	1
5	54833105000	IDLER GEAR 5TH G. 29-T "5E29"	1
10	0625062054	BALL BEARING 6205 C3 NTN	1
11	0405222613	NEEDLE BEAR. K 22X26X13 TN	1
12	0405242812	NEDDLE BEAR. K24X28X11,9 DIV.	1
15	54633015000	STOP DISK 20,2X33X1,5	1
16	54633096000	AXIAL-CIRCLIP 25X1,64	2
20	0625160040	GROOVED BALL BEAR. TM 16004 C3	1
30	59033030000	STOP DISC 25,2X32X1,5	1
43	50333043000	STOP DISC 25,2X32X1	1

05548331 / C065483303

* NEW PART

X AS REQUIRED

TRANSMISSION II

ACHTUNG !!!
Bei Bestellung von Getrieberädern, Markierung beachten.
CAUTION !!!
When ordering transmission gears, check marking.

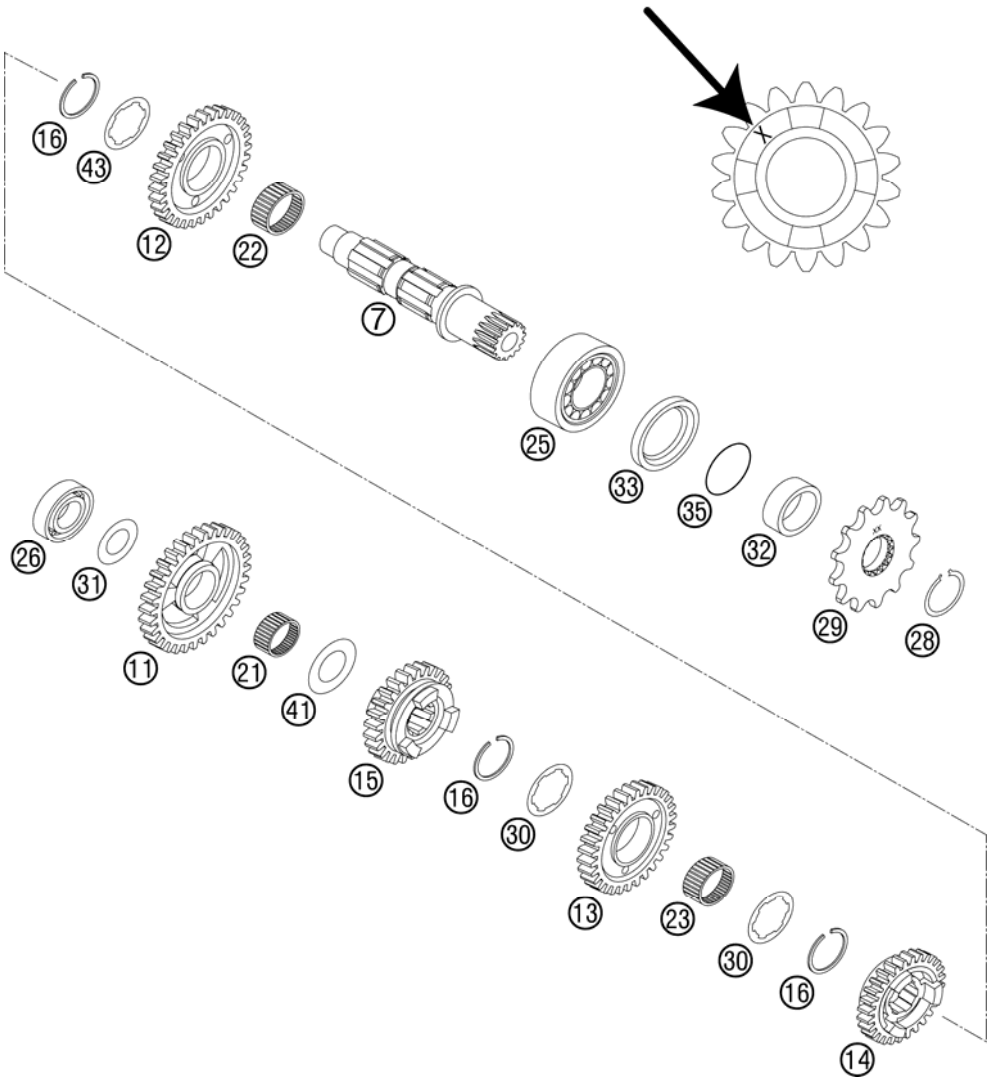

FIG	PART NUMBER	DESCRIPTION	QTY
7	54833007000	COUNTERSHAFT 2003	1
11	54833111000	IDLER GEAR 1ST G. 30-T "1E30"	1
12	54833112000	IDLER GEAR 2ND G. 26-T "2E26"	1
13	54833113000	IDLER GEAR 3RD G. 23-T "3E23"	1
14	54833114000	SLIDING GEAR 4TH G.20-T "4E20"	1
15	54833115000	SLIDING GEAR 5TH G.23-T "5E23"	1
16	54633096000	AXIAL-CIRCLIP 25X1,64	3
21	0405202413	NEEDLE BEAR. K20X24X13	1
22	0405242812	NEDDLE BEAR. K24X28X11,9 DIV.	1
23	0405222613	NEEDLE BEAR. K 22X26X13 TN	1
25	54833025000	BALL BEARING TM-SC05C20C4 NTN	1
26	0625062035	BALL BEARING 6203 JR2 C3	1
28	52033096000	LOCK RING DIN0471-25X1,64SD	1
29	50033029013	SPROCKET 13-T	x
29	50033029014	SPROCKET 14-T	x
29	50033029015	SPROCKET 15-T	x
30	59033030000	STOP DISC 25,2X32X1,5	2
31	56033030000	STOP DISC 17,2X30X1	1
32	54833032011	SPACER SLEEVE DRIVE END 2003	1
33	0760324565	SHAFT SEAL RING 32X45X6,5 BTSL	1
35	0770248022	O-RING 28,80X2,20 P431 NBR 70	1
41	59033080000	SHIM 20X32X1	1
43	50333043000	STOP DISC 25,2X32X1	1

05548332 / C065483304

* NEW PART

X AS REQUIRED

SHIFTING MECHANISM

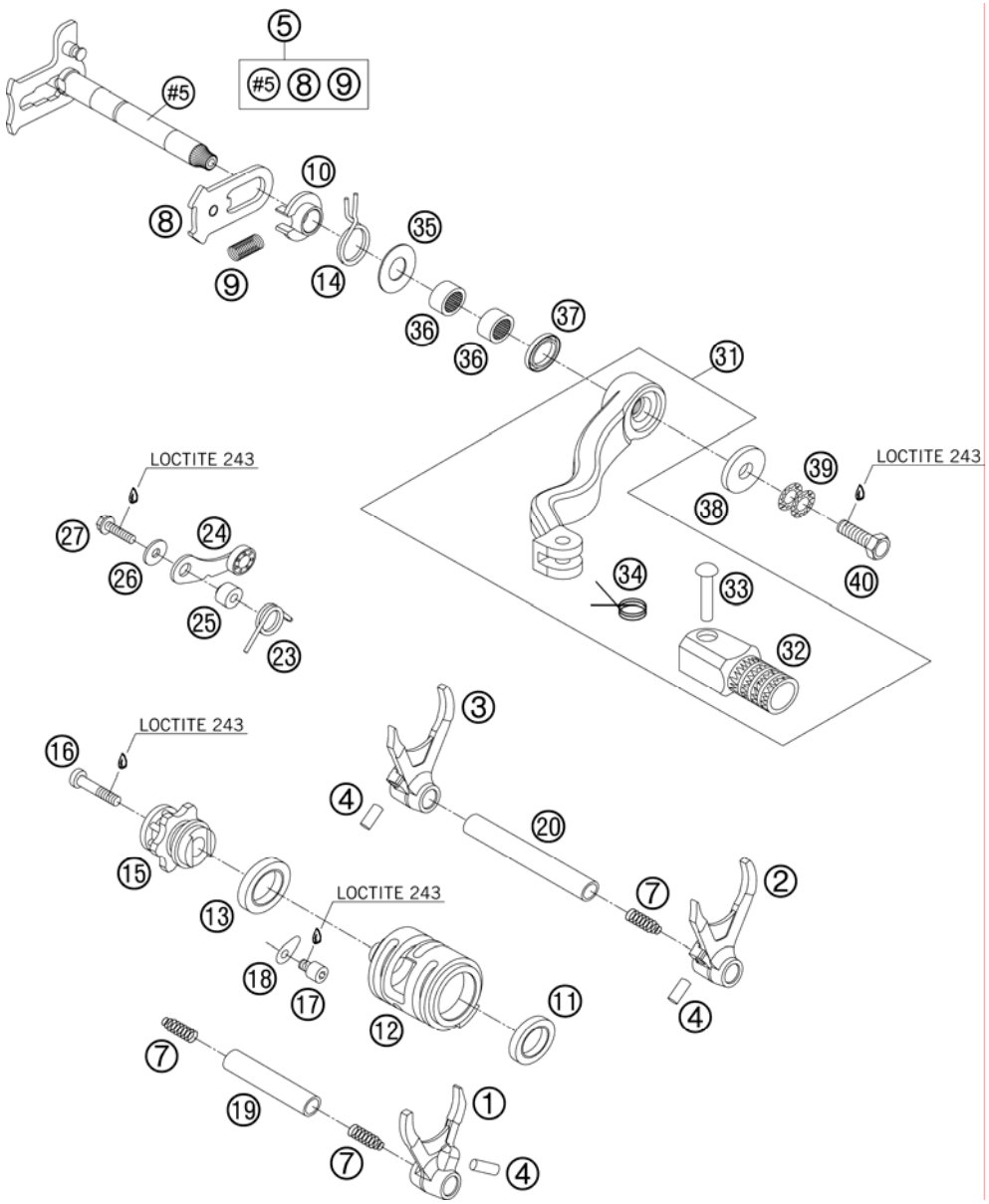

FIG	PART NUMBER	DESCRIPTION	QTY
1	54834001000	SHIFTING FORK 4TH/5TH GEAR 03	1
2	54834002000	SHIFTING FORK 2ND GEAR 03	1
3	54834003000	SHIFTING FORK 1ST/3RD GEAR 03	1
4	0402061480	NEEDLE ROLLER DIN5402 6X14,8	3
5	54834005044	SHIFTING SHAFT CPL. 03	1
7	58038023200	PRESSURE SPRING 0,9MM	3
8	54634008044	SLIDING PLATE CPL.	1
9	56534013100	TENSIONING SPRING 0,8MM	1
10	54634020000	SPRING GUIDE	1
11	0625069034	BALL BEARING 6903 C4	1
12	54834012000	SHIFT ROLLER 03	1
13	0625068050	BALL BEARING 6805 C4 NTN JAPAN	1
14	54834014000	RETURN SPRING 03	1
15	54834015000	SHIFT LOCATING DRUM 2003	1
16	0984060302	AH SCREW DIN6912 M 6X30	1
17	0912060083	AH SCREW DIN0912-M 6X 8	1
18	54634049000	RETAINING PLATE	1
19	54834019000	SHIFT. RAIL MAIN SHAFT 250/300	1
20	54834020000	SHIFT. RAIL C. SHAFT 250/300	1
23	54834023000	LOCKING LEVER SPRING 03	1
24	50334024044	LOCATING LEVER CPL. 125/200'98	1
25	54634052300	SLEEVE FOR LOCKING LEVER	1
26	0349000050	WASHER DIN7349-5X15X2	1
27	0015050203	HH COLLAR SCREW M 5X20 WS=8	1
31	54834031000	SHIFT LEVER CPL. 250/300 05	1
32	54634131000	STEP PLATE FOR SHIFT LEVER 250	1
33	54634031050	BOLT 6X25 FOR SHIFT LEVER	1
34	54634032100	SHIFTING LEVER SPRING 250	1
35	54634050000	STOP DISK 14X30X1	1
36	54632095000	NEEDLE BEAR.HK 1412 14X20X12	2
37	0760142460	SHAFT SEAL RING 14X24X6 B	1
38	50232050001	STEEL WASHER 6,4X17X3	1
39	50233041000	PAIR OF WASHERS M 6 NORDLOCK	1
40	0933060165	HH SCREW DIN0933-M 6X16 10.9	1

05548340 / C065483400

* NEW PART

X AS REQUIRED

COOLING SYSTEM

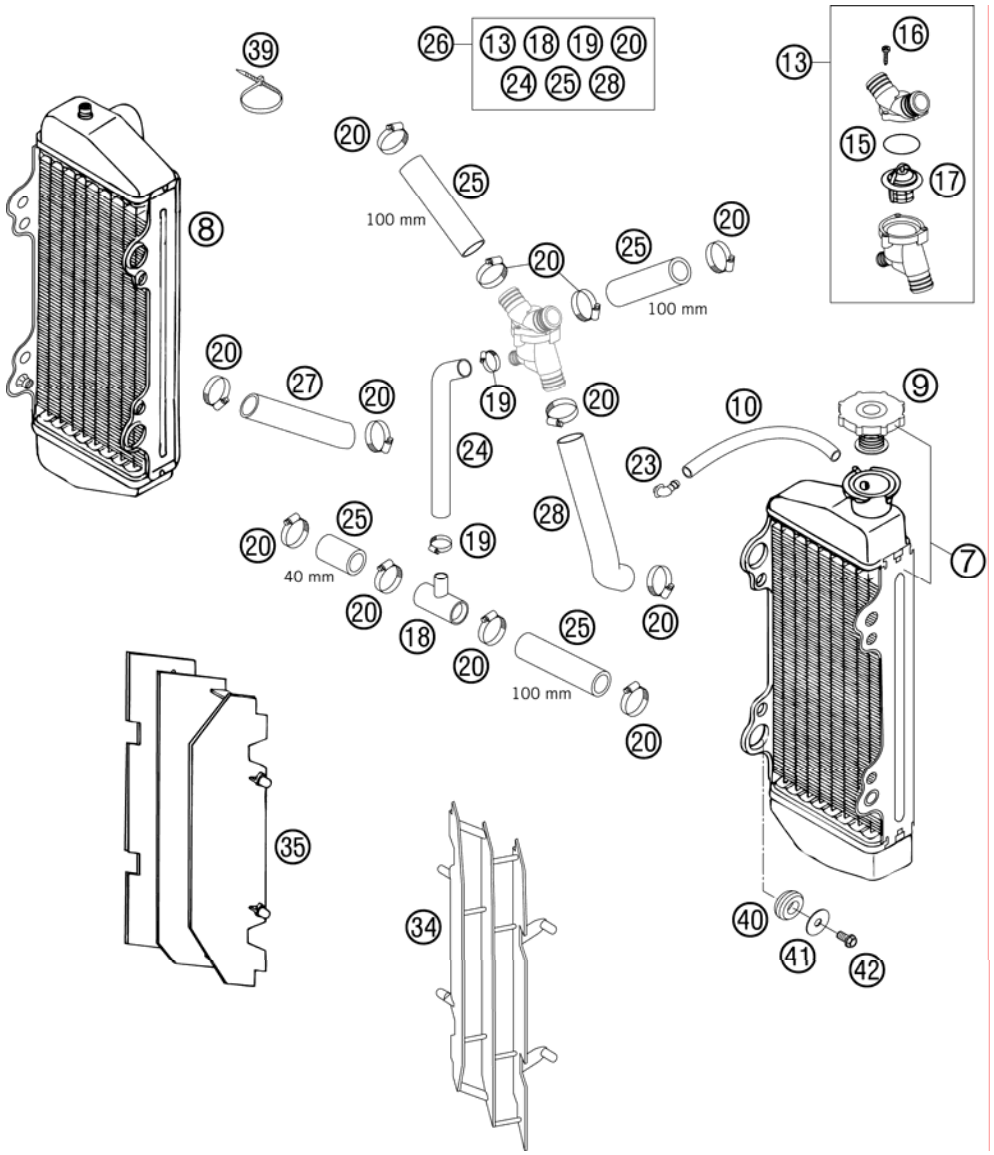

FIG	PART NUMBER	DESCRIPTION	QTY
7	50335007000	RADIATOR L/S NATURE (45286)'98	1
8	50335008000	RADIATOR R/S NATURE (45285)'98	1
9	59035009000	RADIAT.CAP 20,3PSI (1,4BAR) 03	1
10	31007107001	PVC-HOSE 6X9 MM PER METER	x
13	54835013044	THERMOSTAT 55°C CPL. 2004	1
15	0770320020	O-RING 32,00X2,00	1
16	0016040183	SCREW FOR PLASTIC D=4X18	3
17	54835017000	THERMOSTAT 55°C 2004	1
18	54835018000	T-CONNECTOR 23/23/12,5	1
19	58335099000	HOSE CLAMP GEMI 10-16	2
20	10001020000	HOSE CLAMP GEMI 16-27	12
23	50303089000	ANGEL PIECE '97	1
24	54835024000	RADIATOR HOSE 10X17	1
25	56535025001	RADIATOR HOSE 18X25 PER METRE	x
26	54835026033	RADIATOR HOSE W. THERMOSTAT 04	1
27	54835027000	RADIATOR HOSE 18X25X130 MM 03	1
		WATER PUMP - RADIATOR	
28	54835028000	RADIATOR HOSE 18X25	1
34*	5463503420030	RADIATOR PROTECTOR L. BLACK	x
35*	5463513420030	RADIATOR PROTECTOR BLACK 06	x
39	44011076200	CABLE TIE 200/3,6MM BLACK	x
40	41001052000	RUBBER SLEEVE D=12MM	4
41	0021060003	WASHER DIN9021-A 6,4	4
42	0015060123	HH COLLAR SCREW M 6X12 WS=8	4

05548351 / C065483502

* NEW PART

X AS REQUIRED

EXHAUST CONTROL

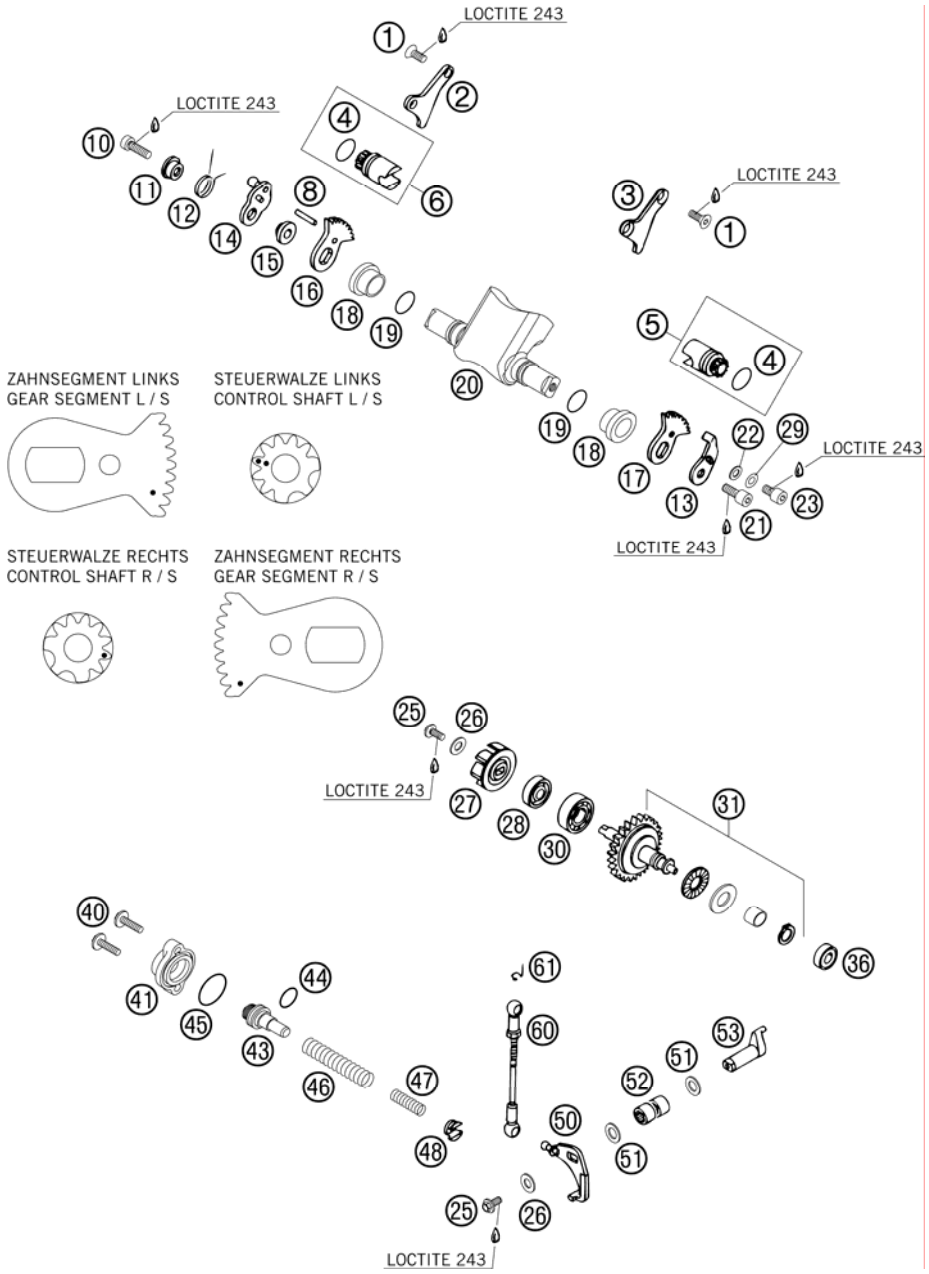

FIG	PART NUMBER	DESCRIPTION	QTY
1	0991050102	FLAT H.SCEW DIN7991-M5X10 10.9	4
2	54637062000	RETAINING PLATE R/S 250	1
3	54637063000	RETAINING PLATE L/S 250	1
4	0770160021	O-RING 16,00X2,00 VITON	2
5	54637361444	CONTR.VALVE L/S "L"300/360/380	1
6	54637361544	CONTROL VALVE R/S 300/360/380	1
8	0007050160	CYLINDER PIN DIN 7-5X16MM (M6)	1
10	0912060203	AH SCREW DIN0912-M 6X20	1
11	54637067000	SPRING SLEEVE	1
12	54637066000	OVERLOAD SPRING	1
13	54637085300	RETAIN.PLATE CONTROL FLAP '92	1
14	54637065000	CONTROL LEVER WITH BALL TYPE	1
15	54637068100	BUSHING SLEEVE	1
16*	54837064000	GEAR SEGMENT R/S 250 06	1
17*	54837064050	GEAR SEGMENT L/S 250 06	1
18	54737019000	BEAR. SLEEVE F.CONTROL FLAP'97	2
19	0770150151	O-RING 15,00X1,50 VITON	2
20*	54837020100	CONTROL CLAP 250 06	1
21	0912060163	AH SCREW DIN0912-M 6X16	1
22	54637056100	WASHER 6,5X11X2	1
23	0912060083	AH SCREW DIN0912-M 6X 8	1
25	0014050123	HH COLLAR SCREW M 5X12 WS=6	2
26	0349000050	WASHER DIN7349-5X15X2	2
27	54635005000	WATER PUMP WHEEL	1
28	0760082472	SHAFT SEAL RING 8X24X7 A DUO	1
29	0137060003	SPRING WASHER DIN0137-B 6	x
30	0625160020	BALL BEARING 16002 C3	1
31	54837050044	CENTRIFUGAL TIMER CPL. 250/300	1
36	54637098100	BALL BEARING 626LLBC3/5K	1
40	0014050203	HH COLLAR SCREW M 5X20 WS=6	2
41	54637070100	COVER LID 250-380'98	1
43	54837075000	SPRING GUIDE 250/300	1
44	0770021120	O-RING 12,37X2,62 NBR70	1
45	0770240020	O-RING 24,00X2,00 NBR70	1
46*	54637072100	% ADJUST.SPRING L=65MM D=2MM '	1
47	54637072300	AUXILIARY SPRING MID., YELLOW	1

05548370 / C065483700

* NEW PART

X AS REQUIRED

EXHAUST CONTROL

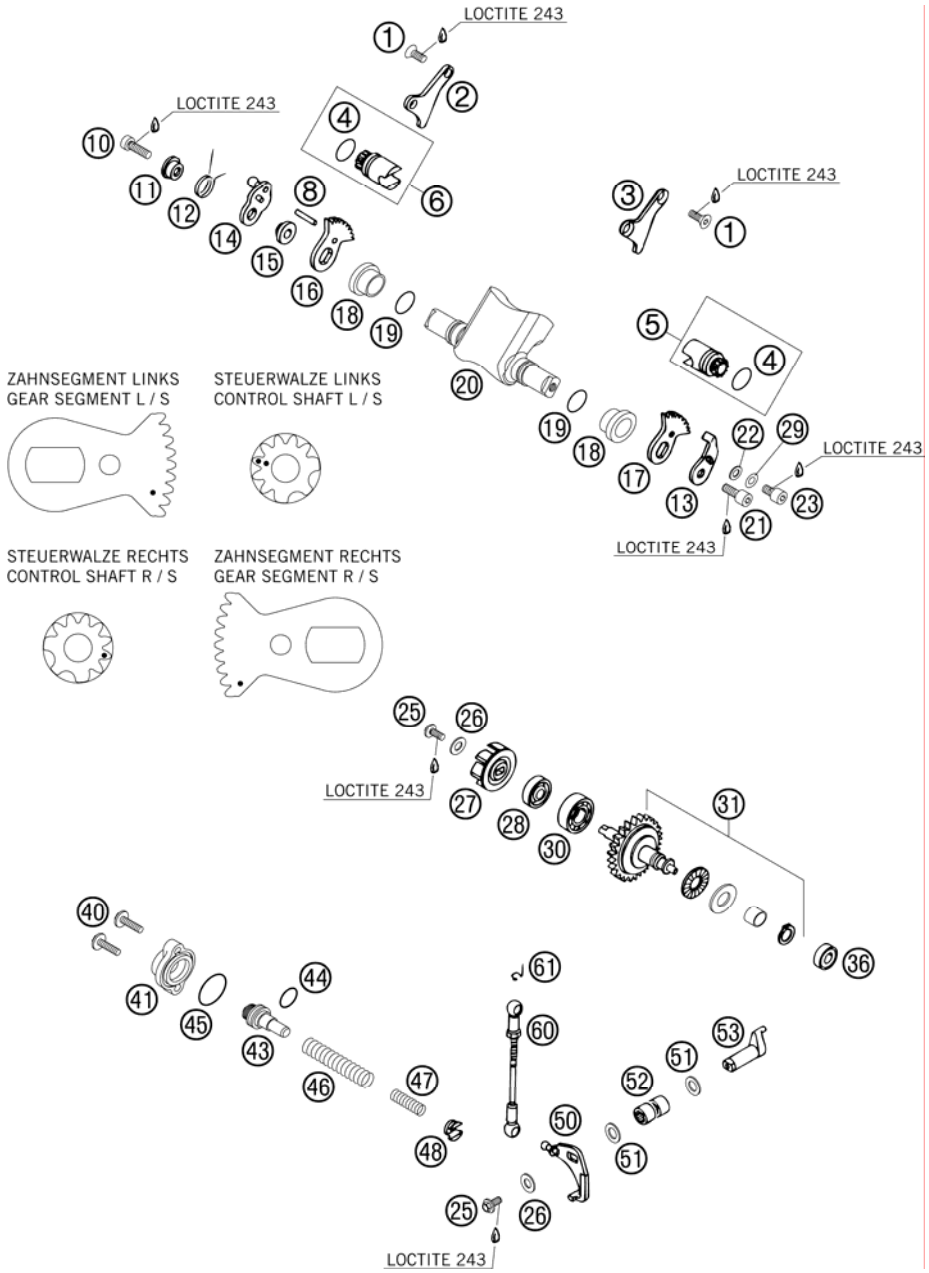

FIG	PART NUMBER	DESCRIPTION	QTY
47	54837072000	AUXILIARY SPRING SOFT, RED	x
47*	54837072100	AUXILIARY SPRING HARD, GREEN	x
48	54637071200	SPRING INSERT	1
50	54637055244	ANGLE LEVER CPL. '91	1
51	0988101610	SHIM WASHER DIN988 10X16X1	2
52	54637096000	NEEDLE SLEEVE HK 1010	2
53	54837057000	CONTROL LEVER 03	1
60	54637095344	CONNECT.ROD CPL. L=109,5MM '91	1
61	50237195055	SECURING DIN-71805-S-8	2

05548370 / C065483700

* NEW PART

X AS REQUIRED

IGNITION SYSTEM

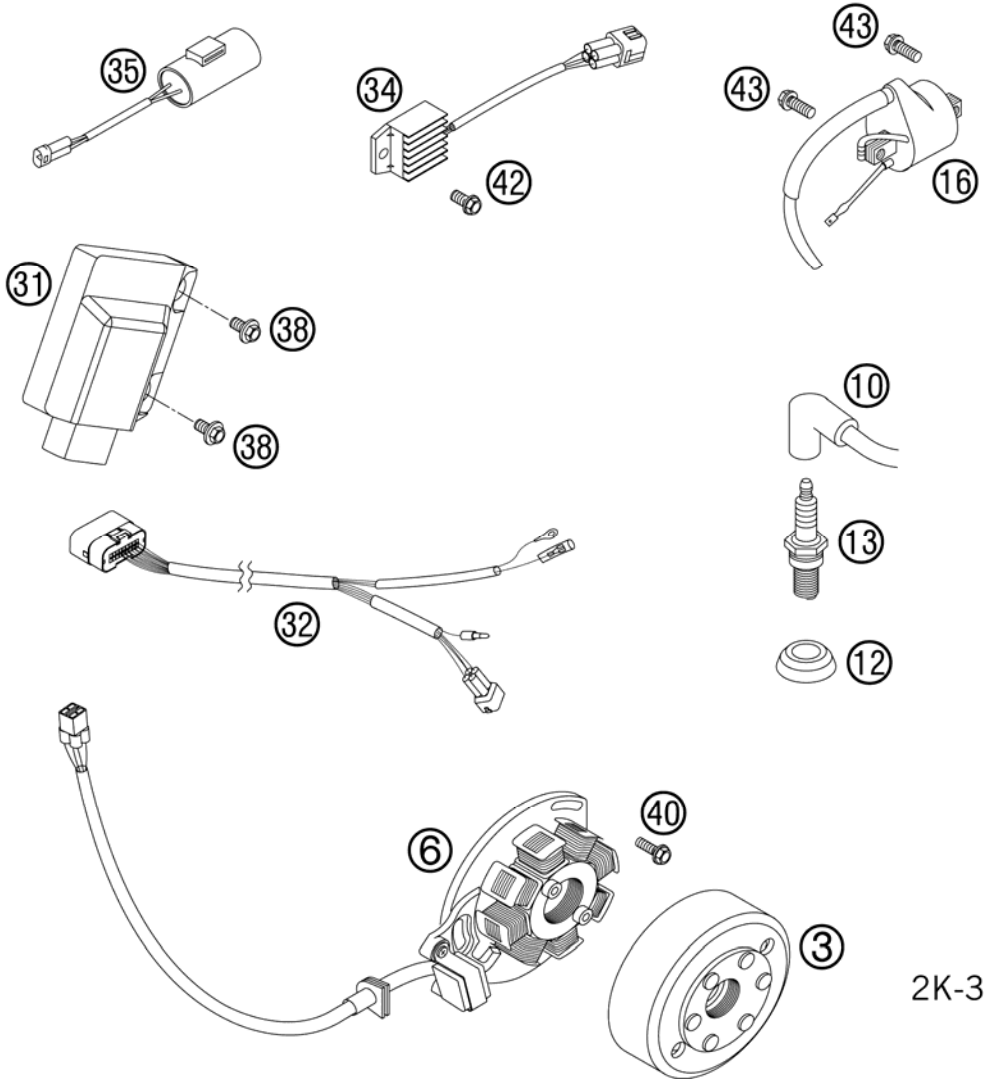

FIG	PART NUMBER	DESCRIPTION	QTY
3	50339005200	FLYWHEEL KOKUSAN 2K-3 '98	1
6	54839204000	STATOR KOKUSAN 2K-3 2005	1
10	47039090000	SPARK PLUG CAP NGK REINFORC.04	1
12	50231012000	SEALING CUP FOR SPARK PLUG	1
13	54739093000	SPARK PLUG NGK BR7ES	1
16	50339006000	IGNI.COIL KOKU.3834 125-380'98	1
31	54839031400	CDI UNIT 250 EXC 05	1
32	54839032000	WIRING HARNESS FOR CDI 2-ST.05	1
34	80011034000	VOLTAGE REGULATOR 04	1
35	50311035000	CONDENSATOR 2200MF ADP-48 2000	1
38	0014060103	HH COLLAR SCREW M 6X10 WS=8	x
40	0015050163	HH COLLAR SCREW M 5X16 WS=8	3
42	0015060123	HH COLLAR SCREW M 6X12 WS=8	1
43	0015060163	HH COLLAR SCREW M 6X16 WS=8	2

065233900 / C065483903

* NEW PART

X AS REQUIRED

NOTICE

KTM Group Partner

3CM083680EN

Art.Nr.: 3CM083680EN 6/2005

KTM-Sportmotorcycle AG

A-5230 Mattighofen

www.ktm.at