690 LC4 RALLY 2008

SPARE PARTS MANUAL: ENGINE

ART.NO.: 3CM088520HEN

ENGLISH

INDEX

SPECIAL TOOLS

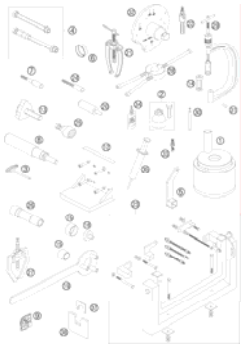

3

BALANCER SHAFT

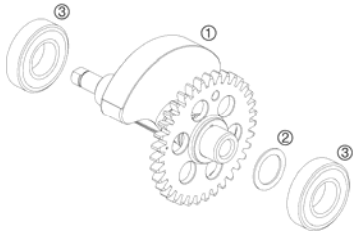

4

CYLINDER

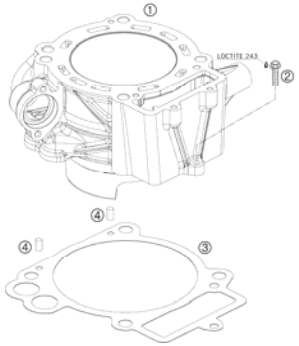

5

CRANKSHAFT, PISTON

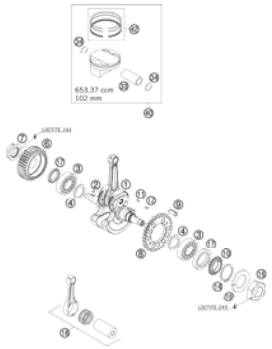

6

ENGINE CASE

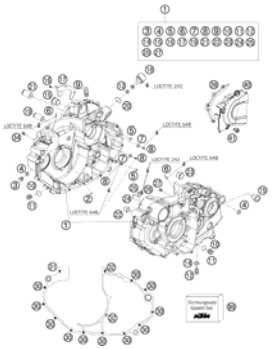

7

CLUTCH COVER

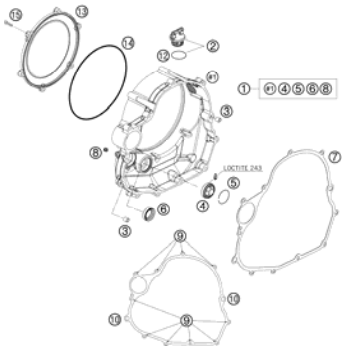

8

SECONDARY AIR SYSTEM SAS

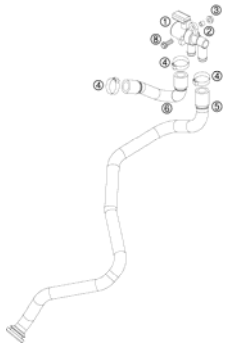

9

CARBURETOR

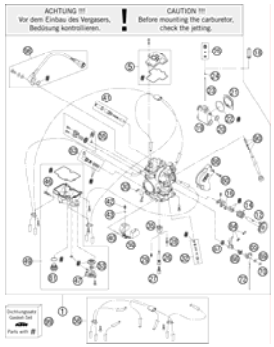

10

CLUTCH

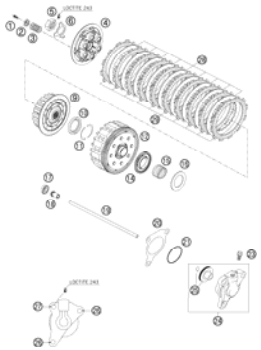

12

TRANSMISSION I - MAIN SHAFT

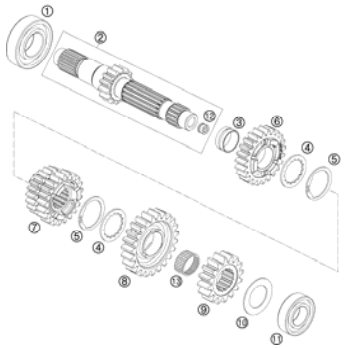

13

TRANSMISSION II - COUNTERSHAFT

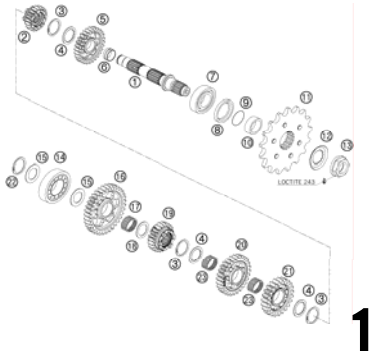

14

SHIFTING MECHANISM

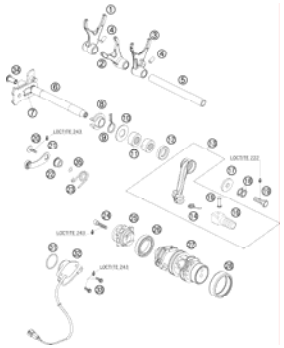

15

INDEX

WATER PUMP

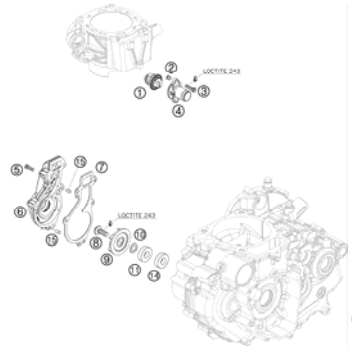

16

COOLING SYSTEM

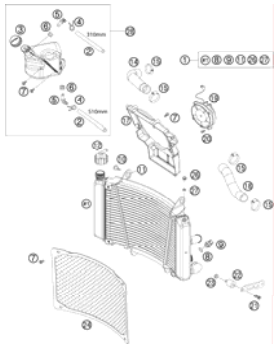

17

VALVE DRIVE

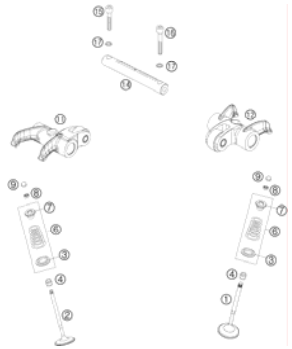

18

TIMING VALVE

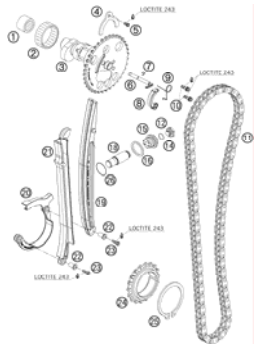

20

CYLINDER HEAD

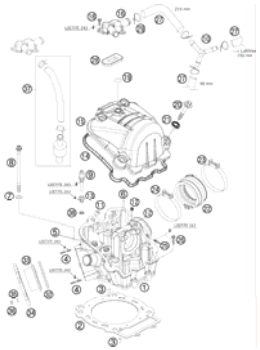

21

LUBRICATING SYSTEM

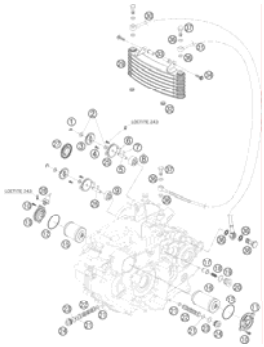

22

IGNITION SYSTEM

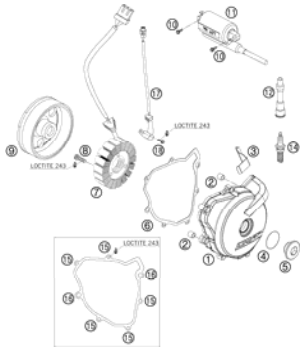

23

ELECTRIC STARTER

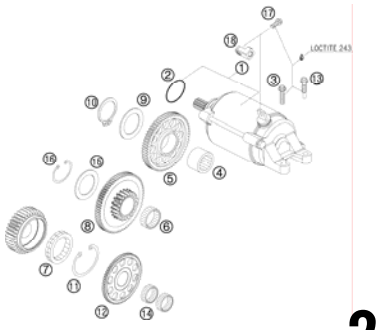

24

All information contained is without obligation. KTM-Sportmotorcycle AG particularly reserves the right to modify any equipment, technical specifications, prices, colors, shapes, materials, services, service work, constructions, equipment and the like so as to adapt them to local conditions or to cancel any of the above items, all without previous announcement and without giving reasons. KTM may stop manufacturing certain models without previous notice. KTM shall not be held liable for any deviations of availability and/or ability to deliver, illustrations, descriptions, printing and/or other errors. The illustrated models partly contain extra equipment, which is not applied to standard models.
© by KTM-SPORTMOTORCYCLE AG, Mattighofen AUSTRIA; All rights reserved; Reprint, also in extracts, with written allowance of KTM-SPORTMOTORCYCLE AG, Mattighofen only.

SPECIAL TOOLS

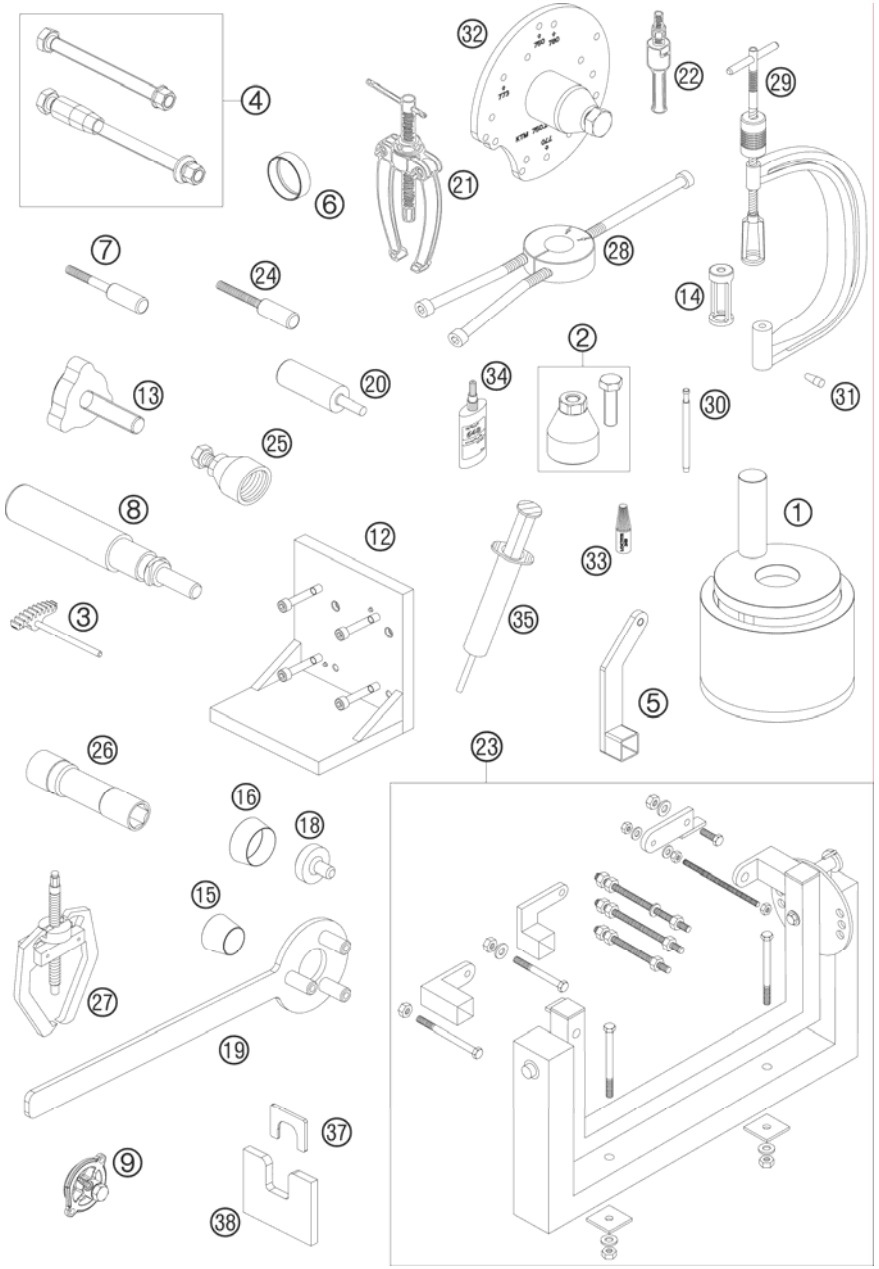

FIG	PART NUMBER	DESCRIPTION	QTY
1	75029047000	PRESS. TOOL F. CRANKS. CPL.	1
2	75029021000	EXTRACTOR PRIM. CPL.	1
3	75029081000	GEAR SEGMENT CPL.	1
4	75012001060	SUPPORT CPL.	1
5	75012001070	RETAIN. ARM F. ENG.WORK STAND	1
6	75029015102	PISTON R. COMPRESSOR DM=102	1
7	75029033000	MOUNTING SCREW	4
8	75029035000	PLUG IN FUSE PISTON PIN	1
9	75029094000	OIL PRESSURE ADAPTER	1
12	75029050000	ON TENSIONER PL. CYLINDER HEAD	1
13	75029051000	PRESS OUT PUNCH CPL.	1
14	77329060000	INSERT FOR VALVE SPRING LEVER	1
15	75029080000	MOUNT.SLEEVE F. SH.S.RING MS	1
16	75029080050	MOUNT.SLEEVE F. SH.S.RING KS	1
18	75029090000	PROTECTOR CAP F.CRANKSHAFT 07	1
19	75029091000	HOLDING SPANNER FOR FLYWHEEL	1
20	77329051000	UNLOCK CHAIN TENSIONER	1
21	15112017000	BUSHING EXTRACTOR	1
22	15112018100	INTERN.BEAR.PULLER 18-23 MM	1
23	56012001000	UNIVERSAL MOUNTING RACK '96	1
24	77329010000	LOCATING SCREW	1
25	58429009000	MAGNETO EXTRACTOR	1
26	75029172000	SPARK PLUG WRENCH	1
27	59029033000	EXTRACTOR FOR TIMING GEAR	1
28	58429037043	MOUNTING TOOL F.BEARING NJ 207	1
29	59029019000	VALVE SPRING LEVER	1
30	59029026006	LIMIT PLUG GAUGE F.VALVE GUIDE	1
31	58529005000	MOUNT.SLEEVE F. SH.S.RING WAPU	1
32	75029048000	CASING DISMOUNTING TOOL 07	1
33	6899785	LOCTITE 243 BLUE 6CCM	1
34	58429059000	LOCTITE 648 GREEN 24ML	1
35	58429059200	LOCTITE 5910 50ML	1
37	75029047050	PRESS OUT PLATE TOP PART	1
38	75029047051	PRESS OUT PLATE BOTTOM PART	1

077502910 / C077502910

* NEW PART

X AS REQUIRED

BALANCER SHAFT

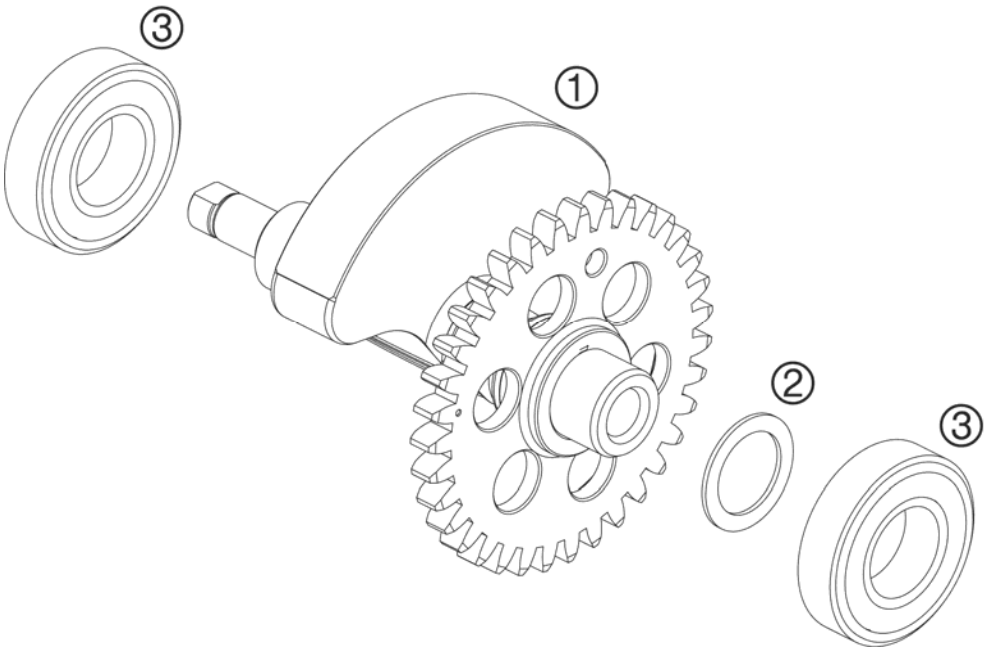

FIG	PART NUMBER	DESCRIPTION	QTY
1	75030057044	BALANCER SHAFT CPL. 07	1
2	0988203202	THRUST WASH.DIN0988-20X32X0,2	x
2	0988203203	THRUST WASH.DIN0988-20X32X0,3	x
2	0988203215	THRUST WASH.DIN0988-20X32X0,15	x
3	0625062221	BALL BEARING 62/22 C4	2

077503030 / C077503030

* NEW PART

X AS REQUIRED

CYLINDER

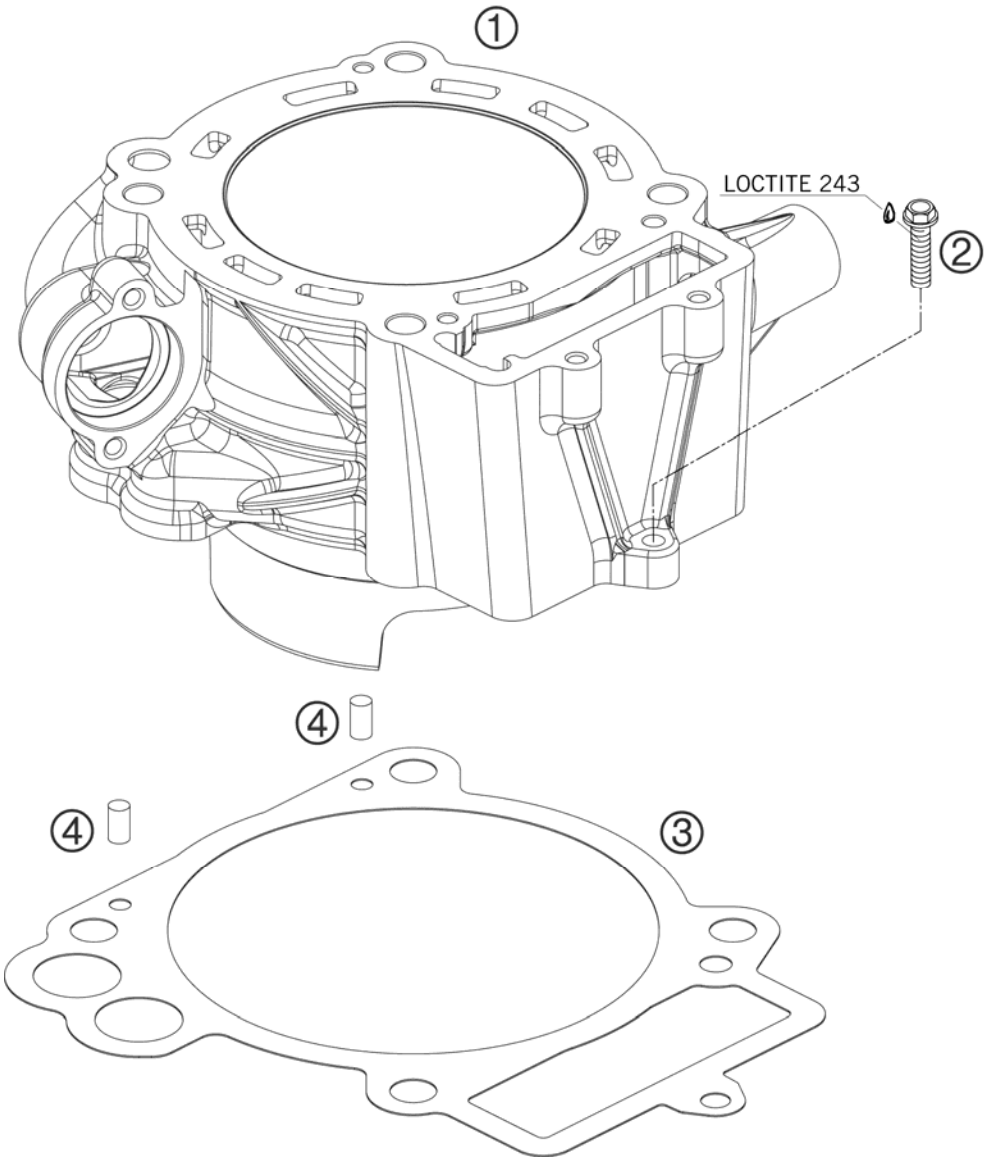

FIG	PART NUMBER	DESCRIPTION	QTY
1	75030005000	CYLINDER 07	1
2	0015060253	HH COLLAR SCREW M 6X25 WS=8	1
3	75030035000	CYLINDER BASE GASKET 07	1
4	0474050080	GROOVED PIN DIN1474 5X8	2

077503040 / C077503040

* NEW PART

X AS REQUIRED

CRANKSHAFT, PISTON

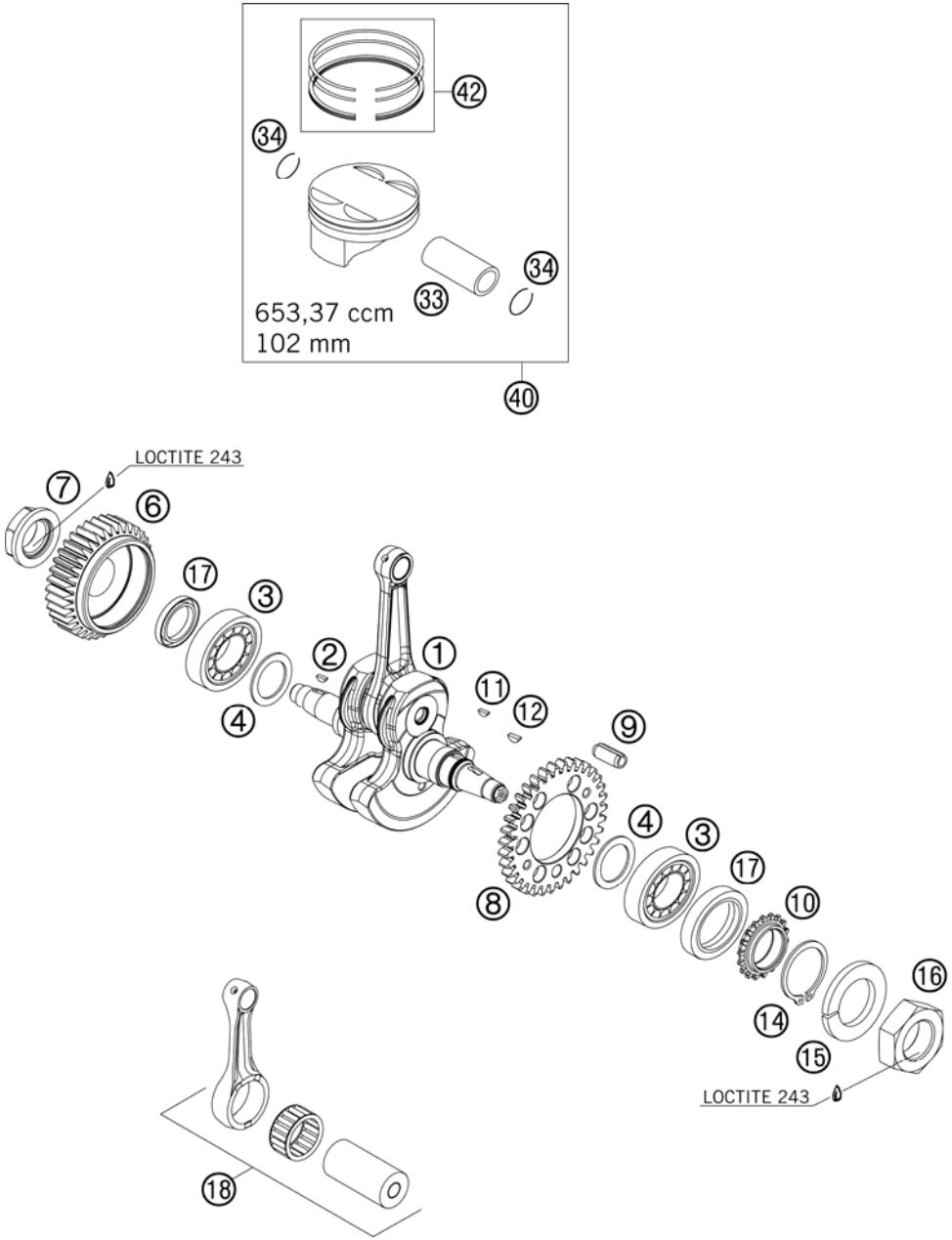

FIG	PART NUMBER	DESCRIPTION	QTY
1	75030018000	CRANKSHAFT CPL.	1
2	0888040050	WOODRUFF KEY DIN6888 4X5X13	1
3	75030018150	CYL.ROLLER BEARING NJ207 ECPC4	2
4	56530081000	SHIM WASHER 36X48X0,10	x
4	56530081100	SHIM WASHER 36X48X0,15	x
4	56530081200	SHIM WASHER 36X48X0,20 STEEL	x
4	56530081300	SHIM WASHER 36X48X0,30	x
6	75032000002	PRIMARY GEAR 36 T 07	1
7	75030029100	NUT FOR PRIMARY GEAR	1
8	75030055000	DRIVE WHEEL BALANCER SHAFT 07	1
9	0749080300	TENSION PIN ISO13337 8X30	1
10	75036014000	TIMING PULLEY 07	1
11	0888030050	WOODRUFF KEY DIN6888-3X5X13	1
12	6946005	WOODRUFF KEY 5X6,5 HARDED	1
14	0471300151	CIRCLIP DIN0471-30X1,5 NIRO	1
15	58132072000	LOCK WASHER VSK 18	1
16	0936181505	HEXAGON NUT DIN0936-M18X1,5 R.	1
17	0760355070	SHAFT SEAL R.35X50X7B VITON	2
18	75030015044	CONNECT. ROD REPAIR SET LC4 07	1
33	75030833000	PISTON PIN LC4 07	1
34	75030074000	CIRCLIP LC4 07	2
40	75030007100 I	PISTON CPL. I 07	x
40	75030007100 II	PISTON CPL. II 07	x
42	75030031044	PISTONRING SET LC4 07	1

077503060 / C077503060

* NEW PART

X AS REQUIRED

ENGINE CASE

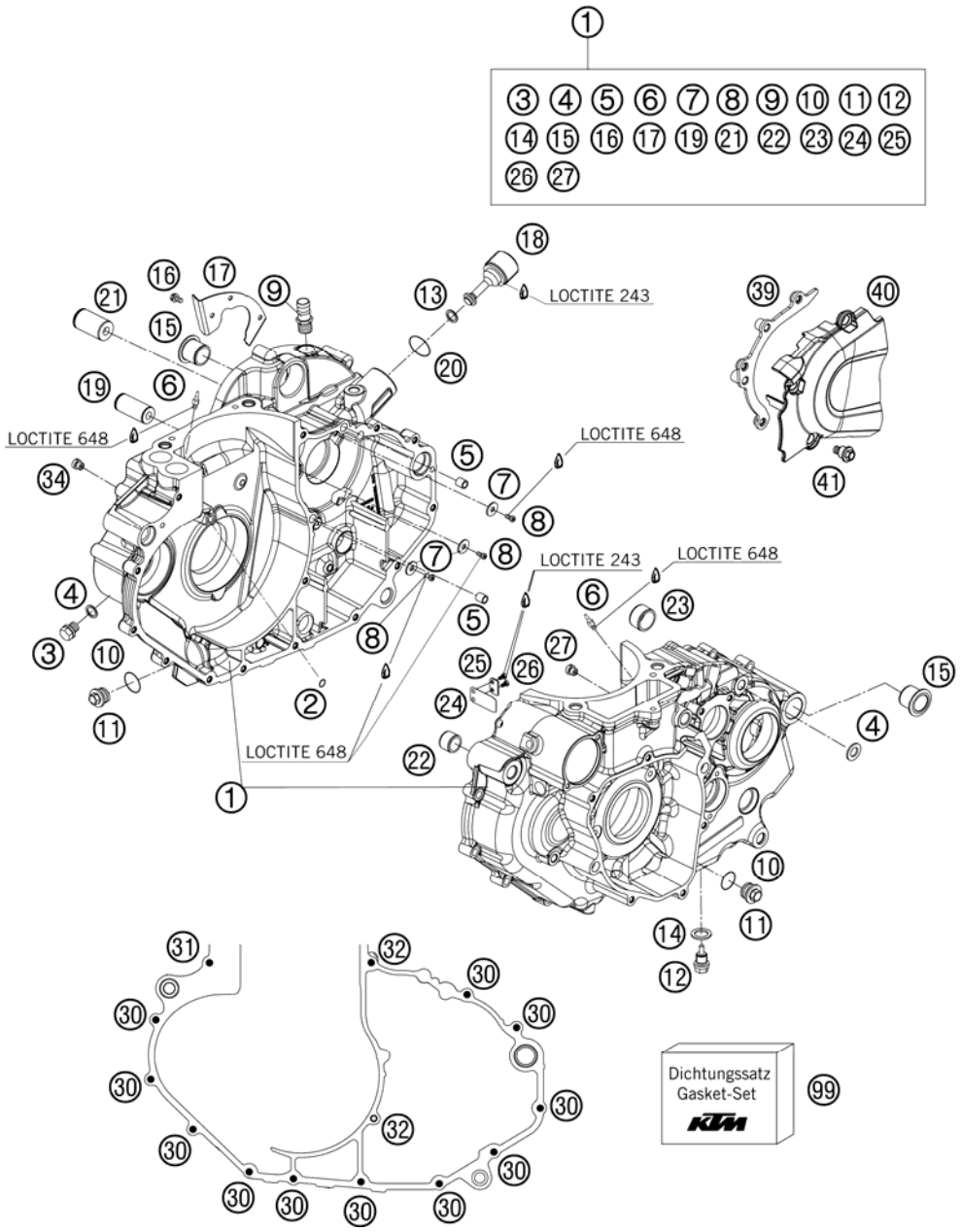

FIG	PART NUMBER	DESCRIPTION	QTY
1	75030000033	ENGINE CASE CPL.W.BEAR. LC4 07	1
2	0770060018	O-RING 6,00X1,78	1
3	0910100003	PLUG DIN0910-M 10X1	1
4	0603100141	COPPER GASKET DIN7603-10X14X1	1
5	59030023000	DOWEL 6X8X11,5	2
6	60030064070	OIL JET 70 M6X0,75 WS8 03	2
7	0021050003	WASHER DIN9021-A 5,3	3
8	073800501001	FLAT HEAD SCREW ISO 7380 M5X10	3
9	60030022000	VENTILATION CONNECTOR M16X1,5	1
10	0770020170	O-RING 17,17X1,78 GLO	2
11	59038017000	PLUG M20X1,5 WS=13	2
12	58030021000	OILDRAIN PLUG W.MAG. M 12X1,5	1
13	58038032100	SEAL RING 8 X 12 X 2	1
14	58038022000	CU-SEAL RING DIN7603-12X18X1,5	1
15	75030010000	CASE BUSH	2
16	0984050103	AH SCREW DIN6912 M5X10 8.8	3
17	75030042000	COVER	1
18	76238048000	LOCK PIECE 07	1
19	54633018400	BUSHING PIN FOR STARTER WHEEL	1
20	0770021140	O-RING 2,62x15,54x20,78 NBR70	1
21	59040028000	BUSHING PIN	1
22	51030026100	DOWEL 17 X 13 X 12	1
23	54830027000	DOWEL 21X12 03	1
24	75030003051	MEMBRANE 07	1
25	75030003050	STOP SHEET MEMBRANE 07	1
26	0458030080	CYLIND.SCREW M3X8 ISO 14580 SS	2
27	57031523200	MAIN JET 200	1
30	0015060303	HH COLLAR SCREW M 6X30 SW=8	11
31	0015060253	HH COLLAR SCREW M 6X25 WS=8	1
32	0015060703	HH COLLAR SCREW M 6X70 WS=8	2
34	75030058000	JET 125	1
39	75030047000	SECURING GUIDE 07	1
40	75030060000	CHAIN GUARD 07	1
41	59001092050	SPECIAL SCREW M6X12,5 WS=8	3
99	75030099000	GASKET SET LC4 2007	1

077623010 / C077623010

* NEW PART

X AS REQUIRED

CLUTCH COVER

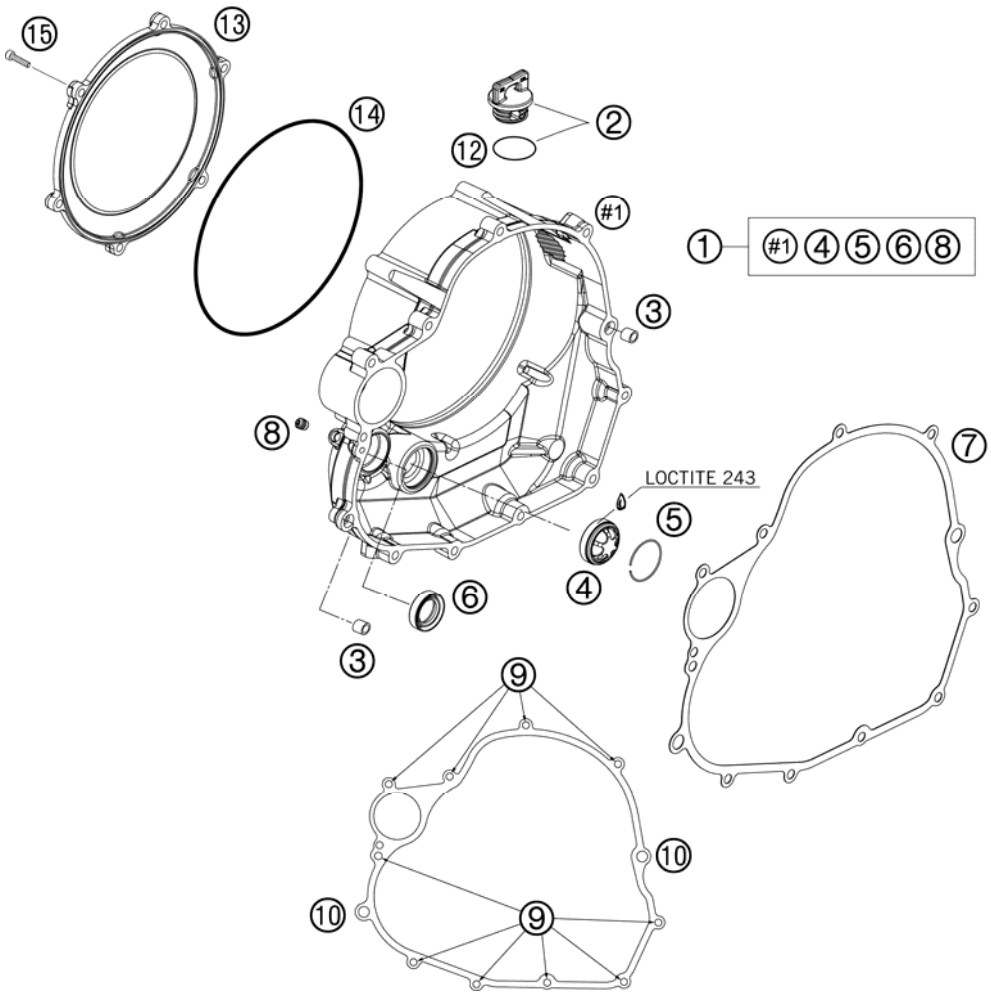

FIG	PART NUMBER	DESCRIPTION	QTY
1	76230001044	CLUTCH COVER CPL. 07	1
2	58030020100	PLUG CPL. M24X3	1
3	49030090000	DOWEL 9,8 X 7 X 10	2
4	59030019000	OIL LEVEL GLASS G 1777 Y	1
5	61030019050	CIRCLIP OIL LEVEL GLASS 03	1
6	0760172871	SHAFT SEAL RING 17X28X7B VITON	1
7	75030025000	CLUTCH CASE GASKET 07	1
8	59030196000	PLUG 00	1
9	0015060253	HH COLLAR SCREW M 6X25 WS=8	10
10	0015060303	HH COLLAR SCREW M 6X30 SW=8	2
12	0770191015	O-RING 19,00X3,00 NBR	1
13	76230026000	OUTER CLUTCH COVER	1
14	0770170024	O-RING 170X2,4	1
15	0984060163	AH SCREW DIN6912-M 6X16	6

077623020 / C077623020

* NEW PART

X AS REQUIRED

SECONDARY AIR SYSTEM SAS

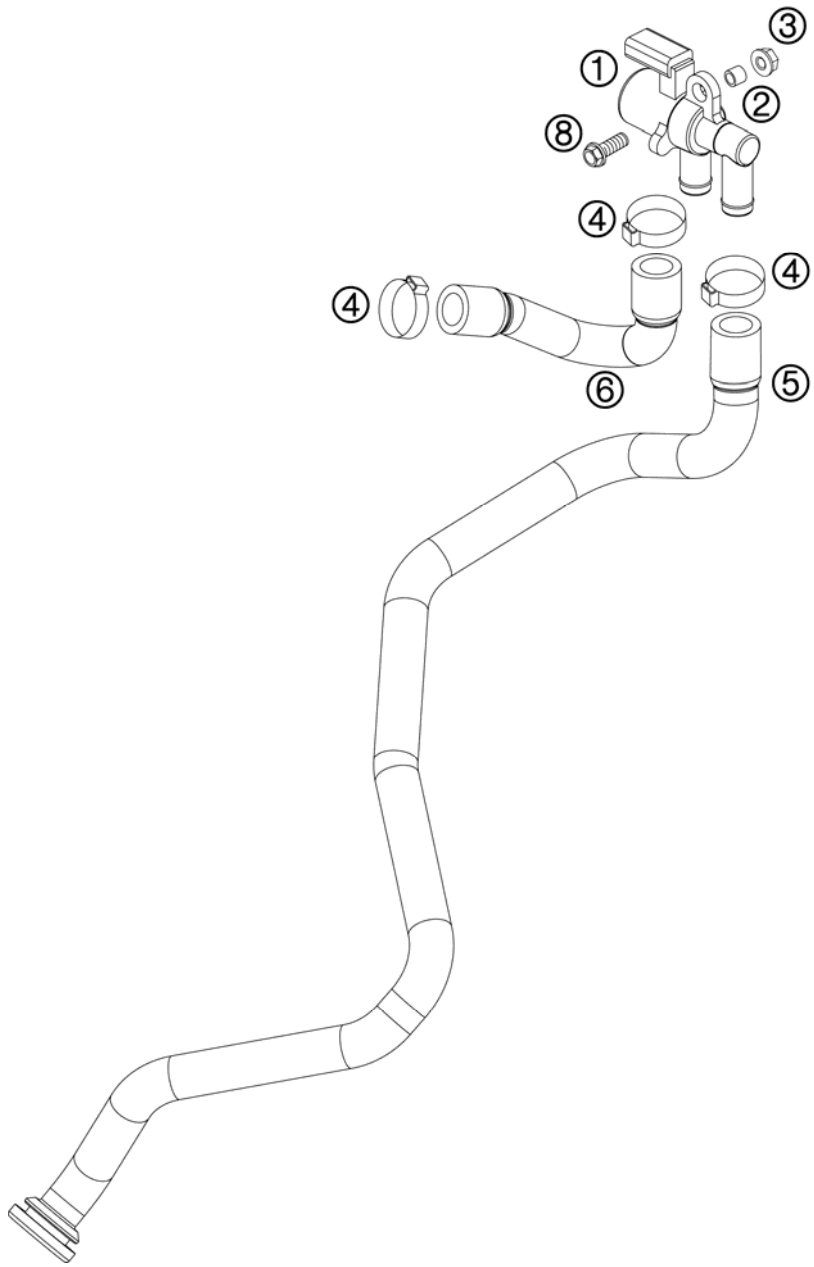

FIG	PART NUMBER	DESCRIPTION	QTY
1	75005026000	SLS-VALVE 07	1
2	58011039000	SPACER BUSHING 6,5 X 8 X 7	1
3	56509064100	SELF LOCKING NUT M6 10.9	1
4	00049200121	CLAMP STD DN20	3
5	75005032000	HOSE SLS AIRFILTERBOX 07	1
6	75005031000	HOSE SLS CYLINDER 07	1
8	0014060153	HH COLLAR SCREW M 6X15 WS=8	1

077503130 / C077503130

* NEW PART

X AS REQUIRED

CARBURETOR

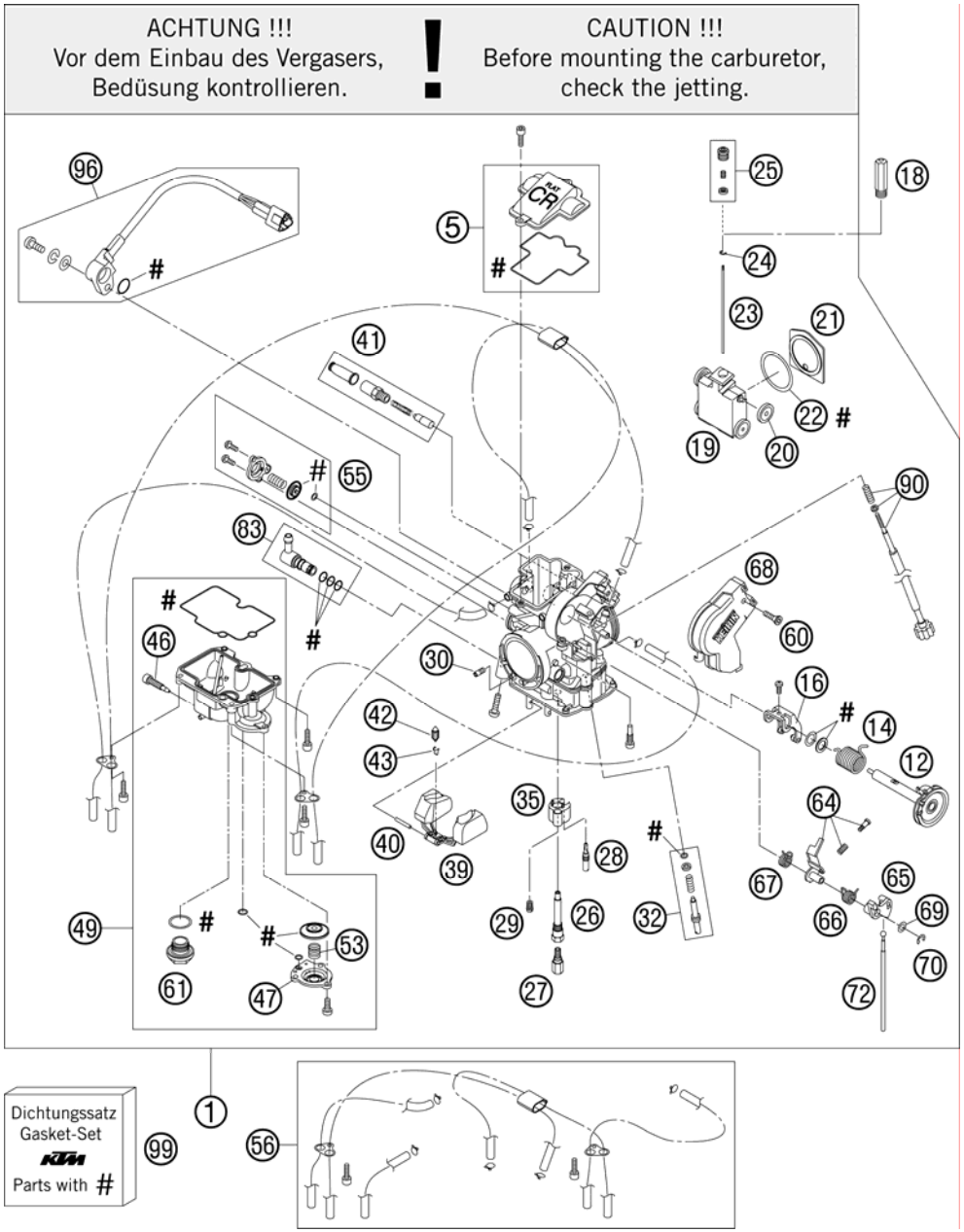

FIG	PART NUMBER	DESCRIPTION	QTY
1	76231001000	CARBURETOR FCR-MX4100BTPS 07	1
5	57331027044	CARBURETOR COVER WITH GASKET	1
12	57331046100	THROTTLE SHAFT CPL. 06	1
14	57331046050	COIL SPRING THROTTLE SHAFT	1
16	76231035051	LINK ARM THROTTLE VALVE CPL.	1
18	59031029010	SLIDE STOP 03	1
19	76231035000	THROTTLE VALVE CPL.	1
20	59031035050	BUSHING THROTTLE VALVE	1
21	57331035153	GASKET PLATE THROTTLE VALVE 04	1
22	59031035052	GASKET WASHER THROTTLE VALVE	1
23	57331034100	JET NEEDLE KEIHIN OBEKP	x
23	57331034200	JET NEEDLE KEIHIN OBEKQ	x
23	57331034300	JET NEEDLE KEIHIN OBEKR	x
23	57331034400	JET NEEDLE KEIHIN OBEKS	x
23	57331034500	JET NEEDLE KEIHIN OBEKT	x
23	59031023200	JET NEEDLE KEIHIN OBDVT	x
24	59031029000	BAR CLIP	1
25	57331032000	NEEDLE SET SCREW CPL.	1
26	59031121000	NEEDLE JET FCR-MX	1
27	54531623162	MAIN JET 162 KEIHIN	x
27	54531623165	MAIN JET 165 KEIHIN	x
27	54531623168	MAIN JET 168 KEIHIN	x
27	54531623170	MAIN JET 170 KEIHIN	x
27	54531623172	MAIN JET 172 KEIHIN	x
27	54531623175	MAIN JET 175 KEIHIN	x
27	54531623178	MAIN JET 178 KEIHIN	x
27	54531623180	MAIN JET 180 KEIHIN	x
28	54531607042	IDLE JET 42 KEIHIN	x
28	54531607045	IDLE JET 45 KEIHIN	x
28	54531607048	IDLE JET 48 KEIHIN	x
29	59031051085	STARTER JET 85	1
30	57331107100	IDLE AIR JET 100 KEIHIN	1
32	59031017100	ADJUST SCREW CPL. FCR-MX	1
35	57331085000	BUFFER PLATE	1
39	57331009000	FLOAT CPL.	1
40	57331008000	ARM PIN FLOAT	1

077623110 / C077623110

* NEW PART

X AS REQUIRED

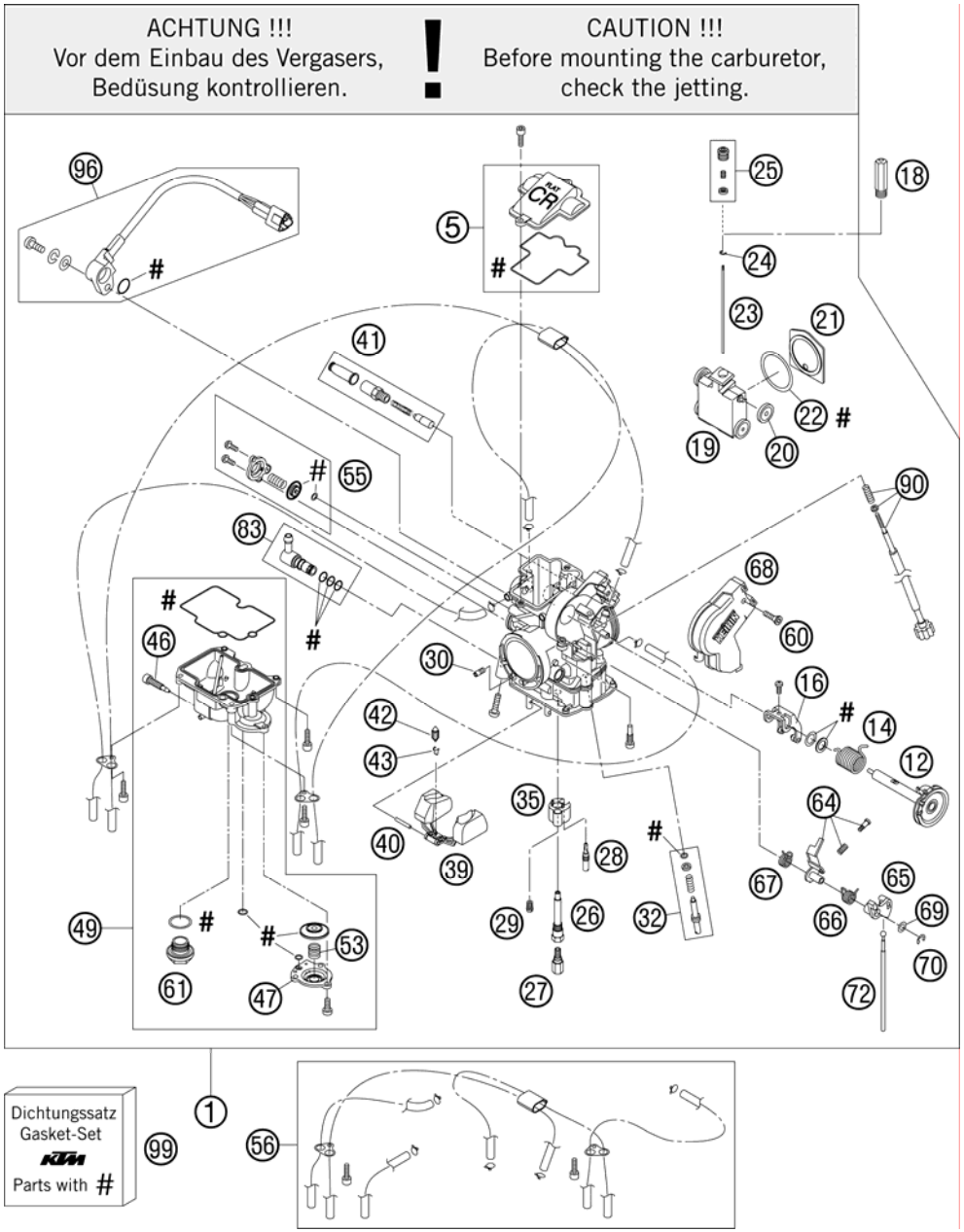

FIG	PART NUMBER	DESCRIPTION	QTY
41	58502096044	CONNECT. COLD START CABLE CPL.	1
42	54631220000	FLOAT NEEDLE	1
43	54531621000	CLAMP	1
46	76231155000	DRAIN SCREW FLOAT CHAMBER	1
47	57331060000	COVER ACCELERATOR PUMP	1
49	78031011000	FLOAT CHAMBER CPL. 08	1
53	59031059000	COIL SPRING	1
55	57331090000	AIR CUT VALVE 2002	1
56	57331098000	BREATH.HOSE FCR-MX KEIHIN CPL.	1
60	0965050103	FLAT HEAD SCREW DIN0965-M 5X10	1
61	54531699000	PLUG M 18X1	1
64	57331062000	INTERMEDIATE LEVER CPL.	1
65	57331056000	LINK LEVER	1
66	57331059000	SPRING LINK LEVER	1
67	57331159000	SPRING INTERMEDIATE LEVER	1
68	57331038200	CARBURETOR COVER 06	1
69	57331087000	WASHER LINK LEVER	1
70	57331084000	E-CLIP	1
72	57331061000	ROD ACCELERATOR PUMP	1
83	59031013044	HOSE CONNECTOR CPL.	1
90	76231025000	STOP SCREW CPL.FCR-MX RALLY 07	1
96	59031077200	TPS-SENSOR FCRMX 190MM 2006	1
99	57331099000	GASKET SET FCR-MX KEIHIN	1

077623110 / C077623110

* NEW PART

X AS REQUIRED

CLUTCH

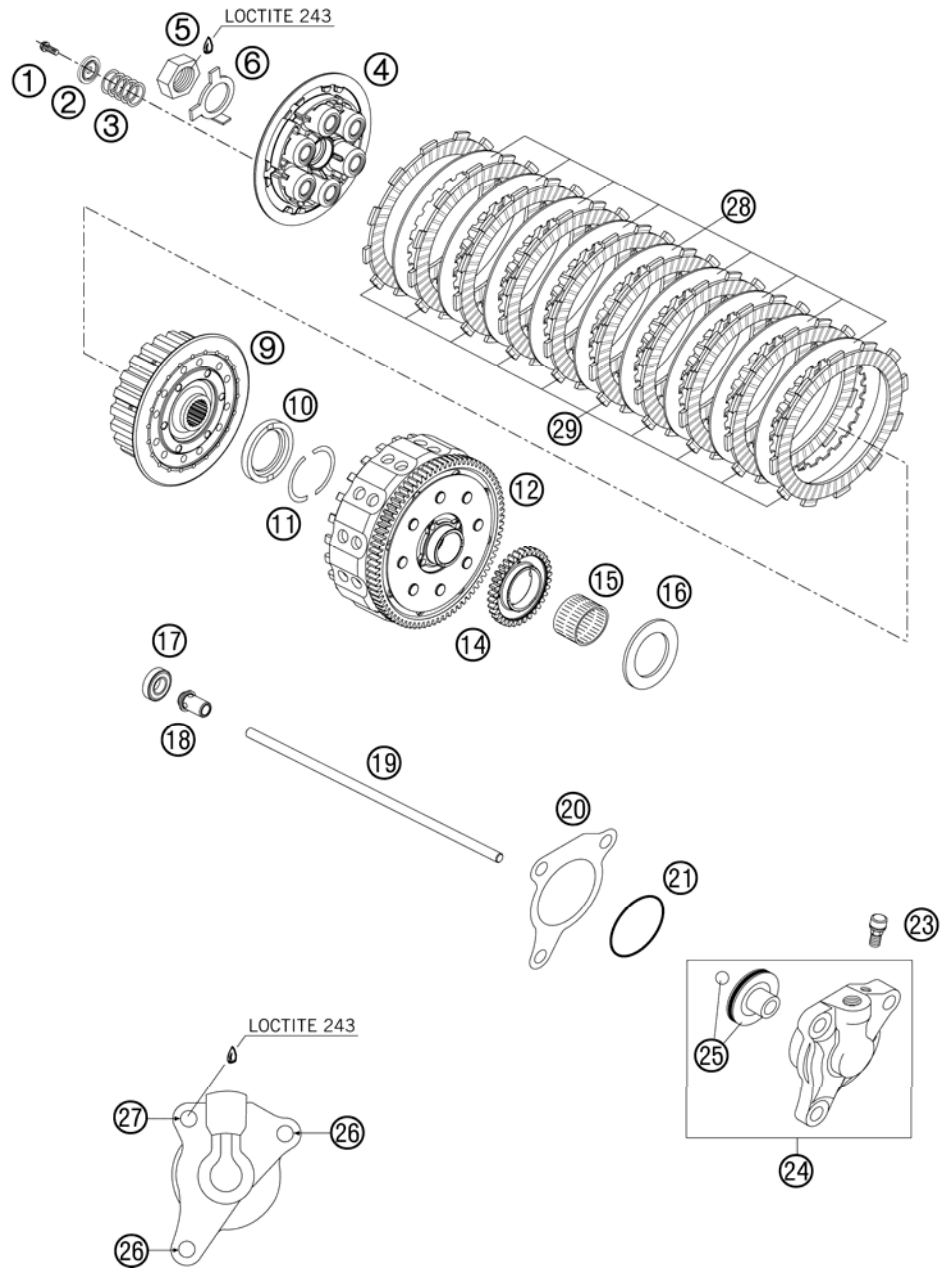

FIG	PART NUMBER	DESCRIPTION	QTY
1	0984060203	AH SCREW DIN6912-M 6X20 8.8	6
2	76232006000	SPRING RING 07	6
3	58532080000	CLUTCHSPRING 3,0X33,5	6
4	76232003000	PRESSURE PLATE 07	1
5	60036073050	HEXAGON NUT M20X1,5 7MM	1
6	75032018000	LOCK WASHER 07	1
9	76232002000	INNER CLUTCH HUB 07	1
10	75032009000	STEPPED WASHER 07	1
11	75032007000	HALF-WASHER 07	2
12	76232001044	OUTER CLUTCH HUB CPL.	1
14	75032050001	OIL PUMP DRIVE WHEEL 07	1
15	56532095000	NEEDLE BEARING K26X30X22ZW.KSE	1
16	75032017000	WASHER 26X40X2 07	1
17	0625060016	GROOV.BALL BEAR. 6001.2RSR C3	1
18	75032055000	PRESSURE BOLT 07	1
19	75032054100	PUSH ROD 08	1
20	59032065000	GASKET FOR SLAVE CYLINDER	1
21	0770300015	O-RING 30,00X1,50 NBR 70	1
23	54732064000	BLEEDER SCREW WITH CAP	1
24	59032061044	OUTPUT CYLINDER CPL. 2003	1
25	59032066000	PISTON WITH O-RING AND BALL 03	1
26	0015060353	HH COLLAR SCREW M 6X35 WS=8	2
27	0015060203	HH COLLAR SCREW M 6X20 WS=8	1
28	58332112000	STEEL DISK 1,5 MM LC4'94	9
29	58332011300	LINING DISK 2,7MM FCC 02	10

077623210 / C077623210

* NEW PART

X AS REQUIRED

TRANSMISSION I - MAIN SHAFT

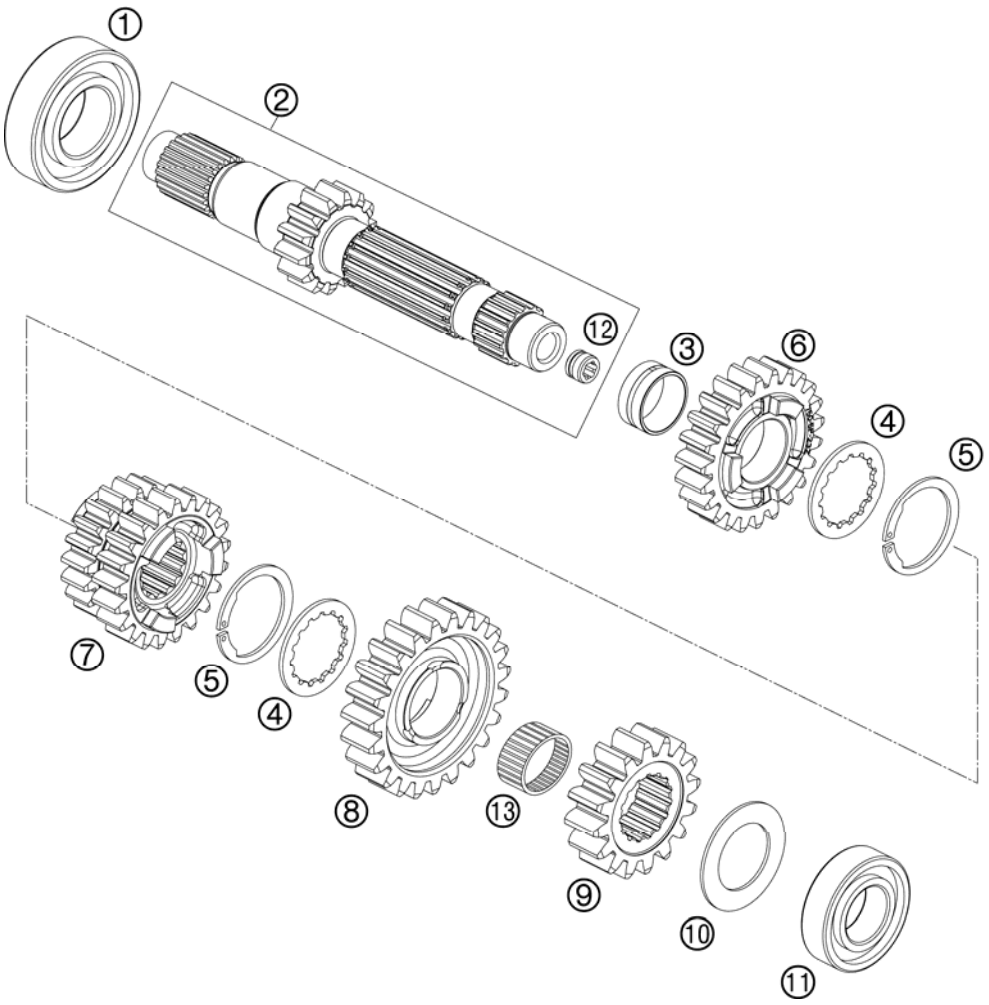

FIG	PART NUMBER	DESCRIPTION	QTY
1	06252858161	BALL BEARING 62/28 C4 N	1
2	76233001000	MAIN SHAFT	1
3	76233022100	BEARING BUSH	1
4	56533016300	STOP DISK 22,7 X 32 X 1,5	2
5	0417025000	CIRCLIP SW25	2
6	76233005000	IDLER 5. GEAR 07	1
7	76233003000	3/4TH GEAR MAINSHAFT 07	1
8	76233006000	IDLER 6. GEAR 07	1
9	75033002000	SOLID GEAR 2.G. 07	1
10	59033080000	SHIM 20X32X1	1
11	0625060041	% BALL BEARING 6004 TNH C3	1
12	77333001160	GUIDE BUSHING	1
13	0405222613	NEEDLE BEAR. K 22X26X13 TN	1

077623330 / C077623330

* NEW PART

X AS REQUIRED

TRANSMISSION II - COUNTERSHAFT

690 LC4 RALLY 2008

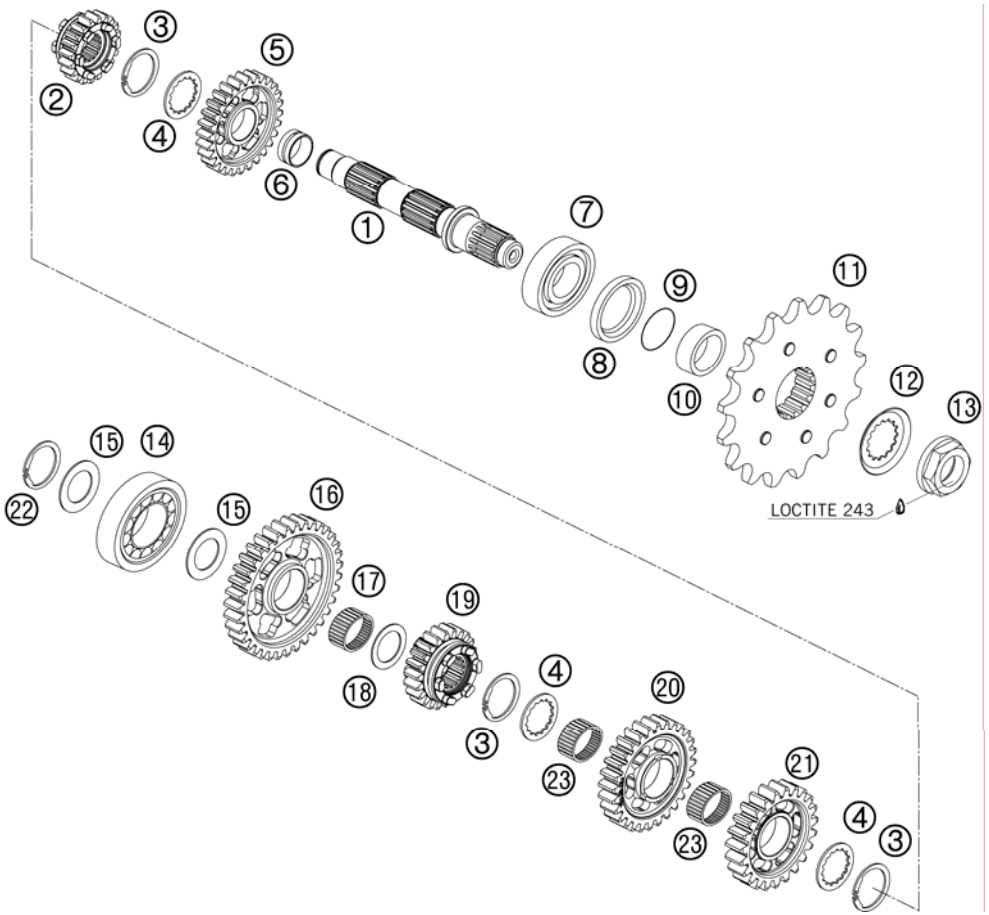

FIG	PART NUMBER	DESCRIPTION	QTY
1	76233010000	COUNTER SHAFT 07	1
2	76233016000	SLIDING GEAR 6TH G. 07	1
3	0417025000	CIRCLIP SW25	3
4	56533016300	STOP DISK 22,7 X 32 X 1,5	5
5	76233012000	IDLER 2. GEAR 07	1
6	76233022100	BEARING BUSH	1
7	49030023100	CYL.ROLLER BEARING NJ205 C4	1
8	0760324773	SHAFT SEAL R. 32X47X7BSL VITON	1
9	0770025020	O-RING 25X2 VITON	1
10	54633014100	SPACER BUSHING 12MM	1
11	58033029015	ENGINE SPROCKET 15 T	x
11	58033029016	ENGINE SPROCKET 16 T	x
11	58033029017	ENGINE SPROCKET 17 T	x
12	51033031000	LOCK WASHER	1
13	58033032200	SPROCKET NUT LC4 03	1
14	0625204213	BALL BEARING 6004 C4 N	1
15	59033080000	SHIM 20X32X1	2
16	75033011000	IDLER GEAR 1ST GEAR 07	1
17	56533098000	NEEDLE BEARING K22X26X13H	1
18	54603036000	STOP DISK 22,2X31,7X1	1
19	76233015000	5TH GEAR COUNTERSHAFT 07	1
20	75033013000	IDLER GEAR 3.G 07	1
21	76233014000	IDLER GEAR 4.G 07	1
22	0471200120	CIRCLIP DIN471 20X1,2	1
23	0405222613	NEEDLE BEAR. K 22X26X13 TN	2

077623360 / C077623360

* NEW PART

X AS REQUIRED

SHIFTING MECHANISM

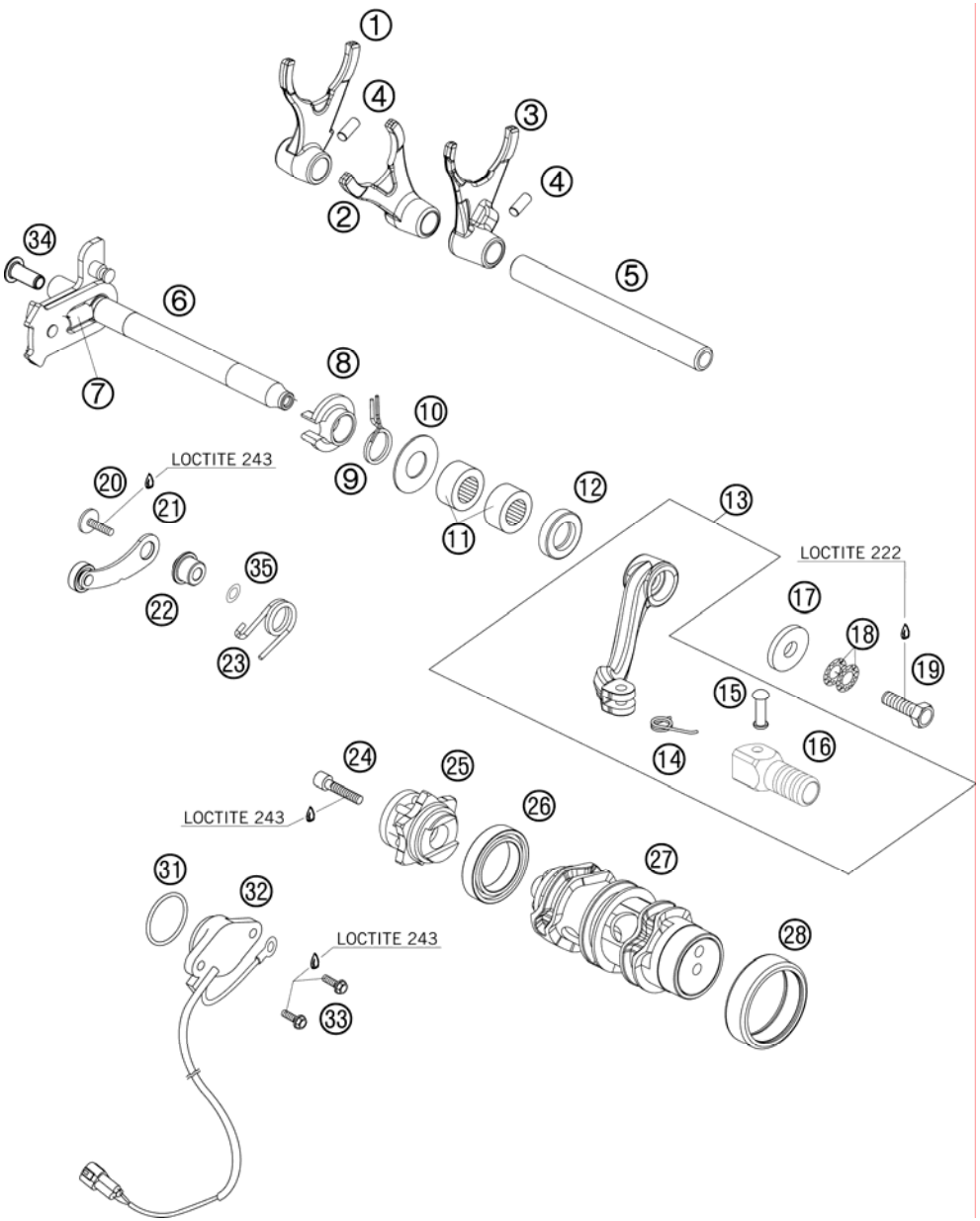

FIG	PART NUMBER	DESCRIPTION	QTY
1	75034002000	SHIFT FORK F. SLIDINGGEAR 5 07	1
2	75034001000	SHIFT FORK F. SLIDINGG. 3/4 07	1
3	75034003000	SHIFT FORK F. SLIDINGGEAR 6 07	1
4	0402061480	NEEDLE ROLLER DIN5402 6X14,8	2
5	75034019000	SHIFTRAIL 07	1
6	75034005044	SHIFT SHAFT CPL. 07	1
7	56534013100	TENSIONING SPRING 0,8MM	1
8	54634020000	SPRING GUIDE	1
9	54634014100	RETURN SPRING 2,2MM '95	1
10	54634050000	STOP DISK 14X30X1	1
11	54632095000	NEEDLE BEAR.HK 1412 14X20X12	2
12	0760142461	SHAFT SEAL RING 14X24X6B VITON	1
13	76234031000	SHIFT LEVER CPL. 08	1
14	54634032100	SHIFTING LEVER SPRING 250	1
15	54634031050	BOLT 6X25 FOR SHIFT LEVER	1
16	54634131000	STEP PLATE FOR SHIFT LEVER 250	1
17	50232050001	STEEL WASHER 6,4X17X3	1
18	50233041000	PAIR OF WASHERS M 6 NORDLOCK	2
19	0933060165	HH SCREW DIN0933-M 6X16 10.9	1
20	0014060203	HH COLLAR SCREW M 6X20 WS=8	1
21	75034024044	LOCKING LEVER CPL. 07	1
22	75034052000	SLEEVE FOR LOCKING LEVER 07	1
23	60034023100	ARRESTING LEVER SPRING 07	1
24	0984060302	AH SCREW DIN6912 M 6X30	1
25	75034015000	SHIFT DRUM LOCATING CPL. 07	1
26	0625068050	BALL BEARING 6805 C4 NTN JAPAN	1
27	76234012044	SHIFT ROLLER CPL.	1
28	0618354212	NEEDLE BEAR HK3512 35X42X12	1
31	0770275025	O-RING 27,5X2,5 NBR	1
32	60011023100	GEAR-POSITION SENSOR 06	1
33	0015050163	HH COLLAR SCREW M 5X16 WS=8	2
34	76234006000	SPACER	1
35	0137060003	SPRING WASHER DIN0137-B 6	1

077623410 / C077623410

* NEW PART

X AS REQUIRED

WATER PUMP

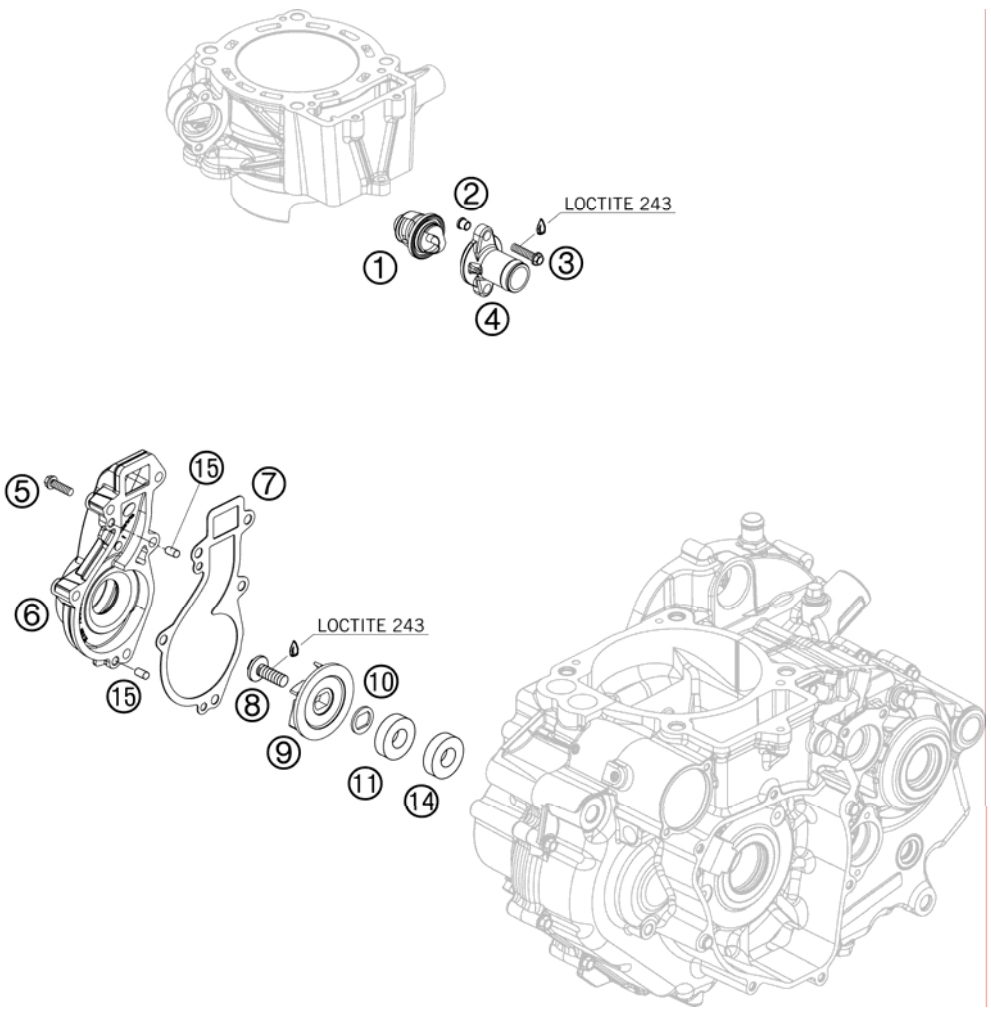

FIG	PART NUMBER	DESCRIPTION	QTY
1	75035017000	THERMOSTAT 07	1
2	60040027050	SUPPORTING SLEEVE 03	2
3	0015060203	HH COLLAR SCREW M 6X20 WS=8	2
4	75035016000	THERMOSTATCOVER 07	1
5	0015060303	HH COLLAR SCREW M 6X30 SW=8	5
6	75035052100	WATERPUMP COVER 07	1
7	75035053000	WATER PUMP COVER GASKET 07	1
8	0014060133	HH COLLAR SCREW M 6X13 WS=8	1
9	75035055000	WATER PUMP ROTOR 07	1
10	60035055150	FORM WASHER 16X1 NIRO 03	1
11	0760123071	SHAFT SEAL RING. 12X30X7 VITON	1
14	0760123073	SHAFT SEAL RING 12X30X7 PTFE	1
15	0474050080	GROOVED PIN DIN1474 5X8	2

077503510 / C077503510

* NEW PART

X AS REQUIRED

COOLING SYSTEM

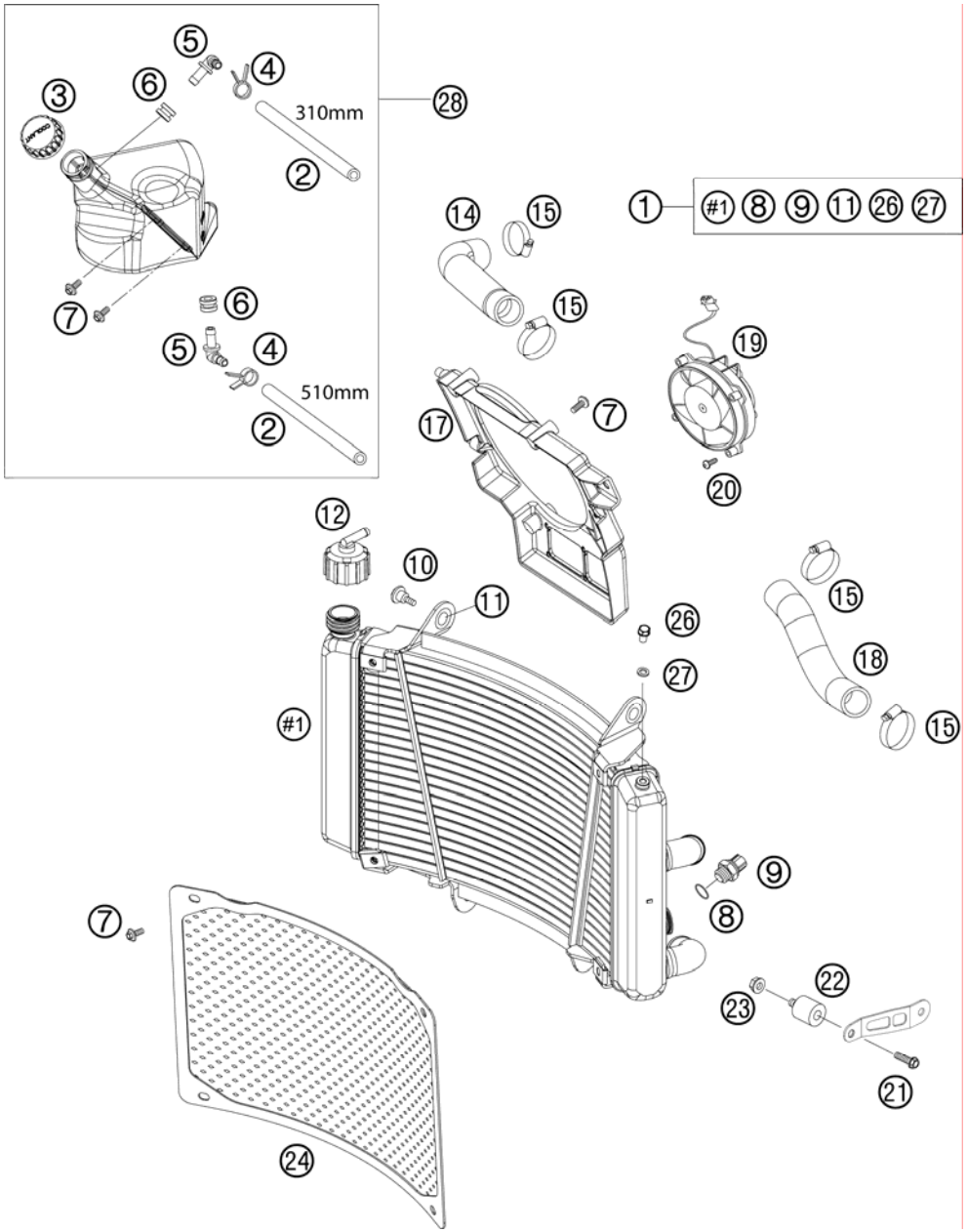

FIG	PART NUMBER	DESCRIPTION	QTY
1	76235010000	RADIATOR "VW 1182" 07	1
2	60035067001	HOSE 6X10 EPDM 03	2
3	60035066000	PLUG F. EXPANSION TANK	1
4	58007117000	YDNAC-CLAMP 10107 10MM	x
5	60035068000	ANGLE CONNECTION EXPANS. TANK	1
6	60035069000	RUBBER GROMMET 6X9X13MM 04	1
7	0014060133	HH COLLAR SCREW M 6X13 WS=8	6
8	0770017015	O-RING 17X1,5 NB75	1
9	60035045000	THERMOSWITCH LC8 102DG '03	1
10	60035001000	SCREW RADIATOR BRACKET M6 03	2
11	41001052000	RUBBER SLEEVE D=12MM	2
12	45135009000	RADIATOR CAP 50 LC 2001	1
14	76535025000	RADIATOR HOSE 08	1
15	76235028000	HOSE CLAMP GEMI 20-32 MM	4
17	76235044000	FAN COWL 07	1
18	76235026000	RADIATOR HOSE 08	1
19	58435041000	FAN CPL. 12V LC4 2000	1
20	0017060203	EJOT PT SCREW K60X20 WS=6	4
21	0014060103	HH COLLAR SCREW M 6X10 WS=8	2
22	43205062100	RUBBER GROMMET 20X15-M6X10 (1)	2
23	0985060003	SELF LOCK. NUT DIN0985-M 6	2
24	76235034044	RADIATOR PROTECTOR 07	1
26	0015060103	HH COLLAR SCREW M 6X10 WS=8	1
27	0125060003	WASHER DIN0125-A 6,4	1
28	76235066000	EXPANSION TANK CPL. 07	1

077623530 / C077623530

* NEW PART

X AS REQUIRED

VALVE DRIVE

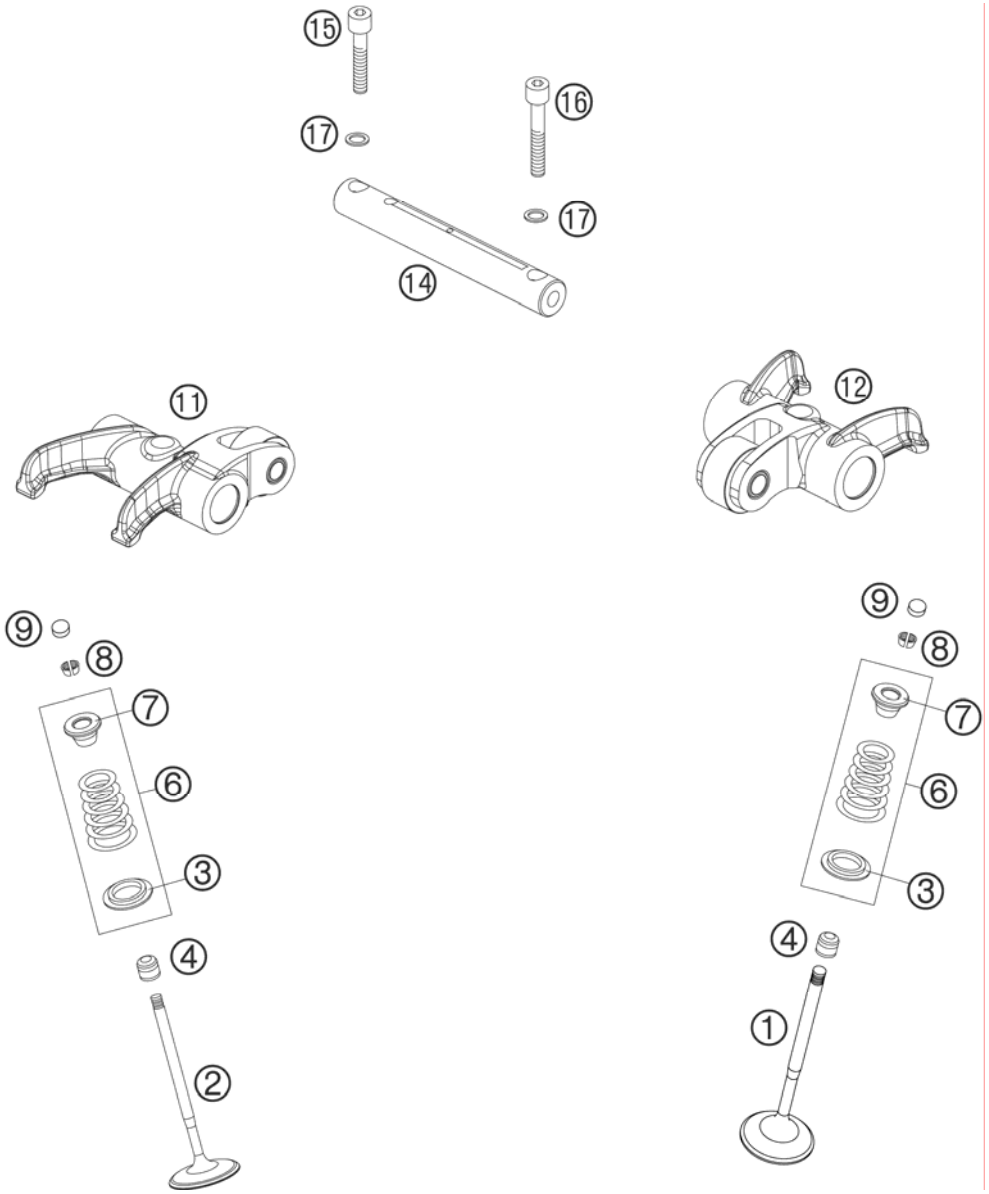

FIG	PART NUMBER	DESCRIPTION		QTY
1	75036030000	INTAKE VALVE	07	2
2	75036031000	EXHAUST VALVE	07	2
3	75036036000	VALVE SPRING HOLDER	07	4
4	59036027000	VALVE-STEM SEALING RACING		4
6	75036028044	VALVE SPRING KIT	07	4
7	75036032000	VALVE SPRING RETAINER	07	4
8	60036033000	VALVE COLLET MK6	03	16
9	60036035185	SHIM D=10/1,85	03	x
9	60036035190	SHIM D=10/1,90	03	x
9	60036035195	SHIM D=10/1,95	03	x
9	60036035200	SHIM D=10/2,00	03	x
9	60036035205	SHIM D=10/2,05	03	x
9	60036035210	SHIM D=10/2,10	03	x
9	60036035215	SHIM D=10/2,15	03	x
9	60036035220	SHIM D=10/2,20	03	x
9	60036035225	SHIM D=10/2,25	03	x
9	60036035230	SHIM D=10/2,30	03	x
9	60036035235	SHIM D=10/2,35	03	x
9	60036035240	SHIM D=10/2,40	03	x
9	60036035245	SHIM D=10/2,45	03	x
9	60036035250	SHIM D=10/2,50	03	x
9	60036035255	SHIM D=10/2,55	03	x
9	60036035260	SHIM D=10/2,60	03	x
9	60036035265	SHIM D=10/2,65	03	x
9	60036035270	SHIM D=10/2,70	03	x
9	60036035275	SHIM D=10/2,75	03	x
9	60036035280	SHIM D=10/2,80	03	x
9	60036035285	SHIM D=10/2,85	03	x
9	60036035290	SHIM D=10/2,90	03	x
9	60036035295	SHIM D=10/2,95	03	x
9	60036035300	SHIM D=10/3,00	03	x
9	60036035305	SHIM D=10/3,05	03	x
9	60036035310	SHIM D=10/3,10	03	x
9	60036035315	SHIM D=10/3,15	03	x
9	60036035320	SHIM D=10/3,20	03	x
11	75036061044	ROCKER ARM EXHAUST CPL.	07	1

077503610 / C077623610

* NEW PART

X AS REQUIRED

VALVE DRIVE

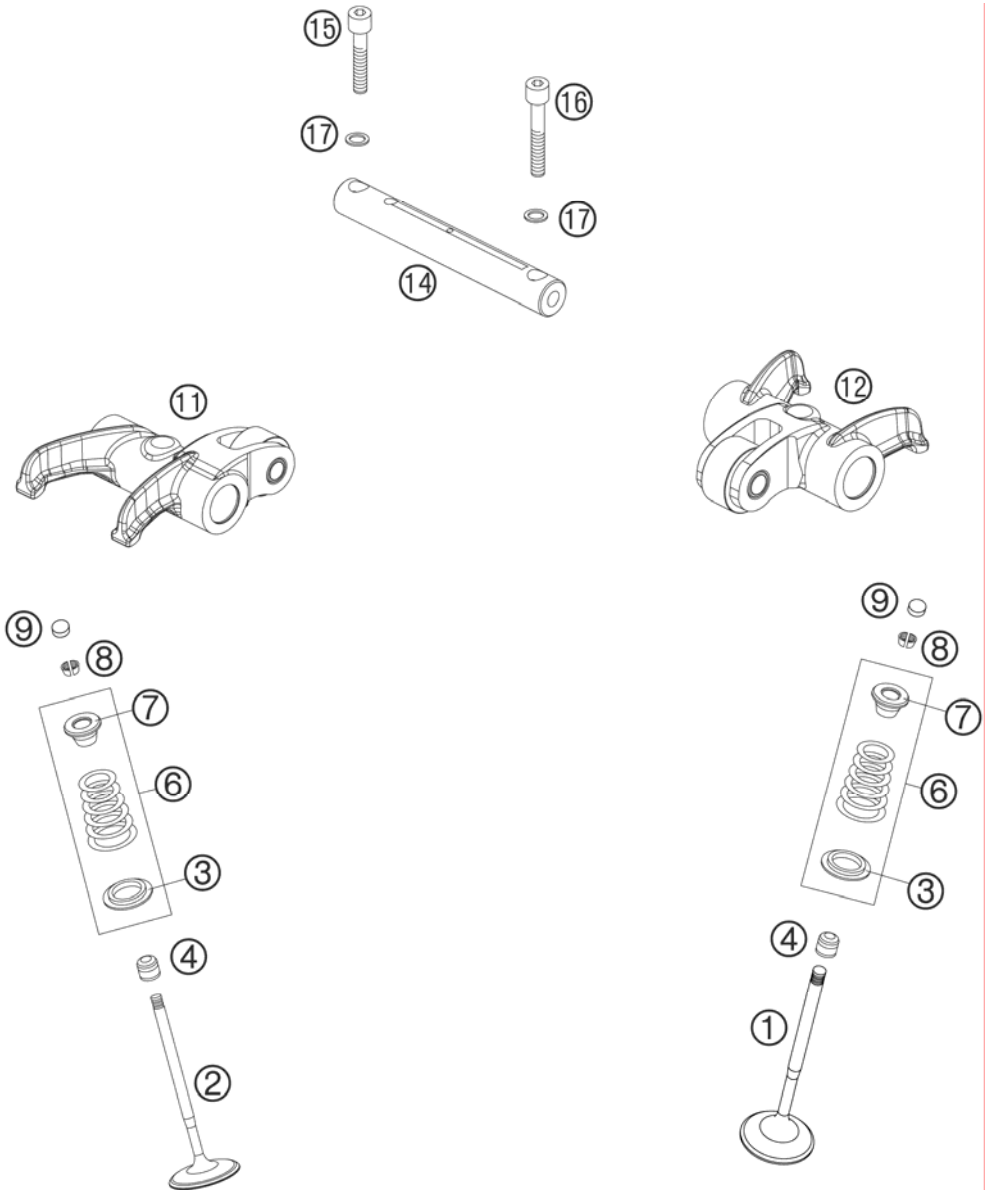

FIG	PART NUMBER	DESCRIPTION	QTY
12	75036060044	ROCKER ARM INTAKE CPL. 07	1
14	75036056000	ROCKER ARM SHAFT 07	2
15	0912060306	AH SCREW DIN912 M6x30	2
16	0912060406	AH SCREW DIN0912 M 6X40	2
17	0125060003	WASHER DIN0125-A 6,4	4

077503610 / C077623610

* NEW PART

X AS REQUIRED

TIMING VALVE

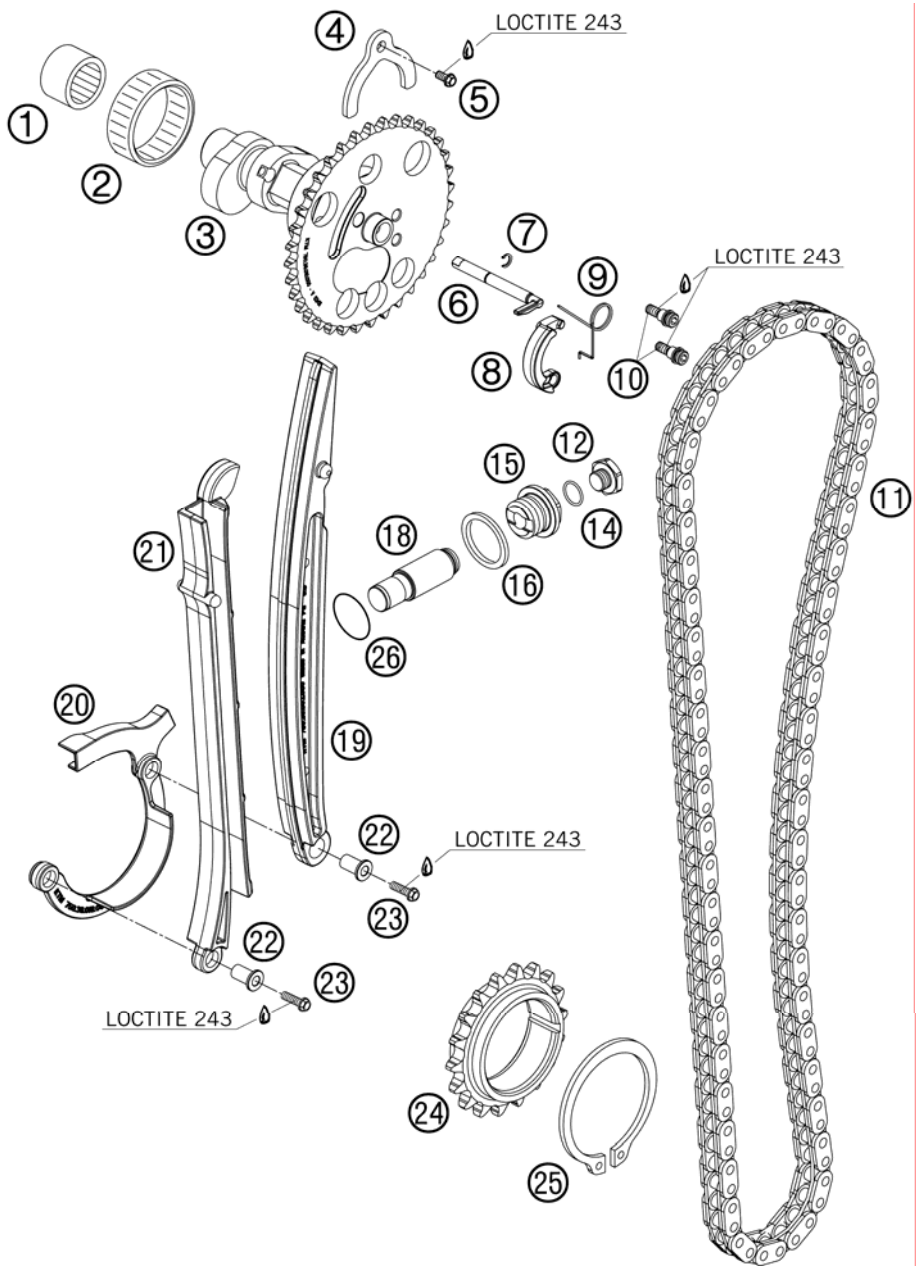

FIG	PART NUMBER	DESCRIPTION	QTY
1	0618182414	NEEDLE SLEEVE HK1814RS18/24/14	1
2	0618404712	NEEDLE SLEEVE HK4012B40X47X12	1
3	76236010044	CAMSHAFT CPL. 07	1
4	75036010050	CAMSHAFT HOLDER 07	1
5	0015060123	HH COLLAR SCREW M 6X12 WS=8	1
6	75036016000	AUTO DECOMPRESSION 07	1
7	75036016050	HALF MOON RING H6-BLS 07	1
8	75036015000	AUTO DECO WEIGHT 07	1
9	75036017000	SPRING FOR AUTO DECOMPR. 07	1
10	75036019000	DECO SCREW 07	2
11	75036013000	TIMING CHAIN 104 LINKS 07	1
12	77336008010	HOLDING BOLT	1
14	0770010010	O-RING 10,00X1,00 NBR 70 SH	1
15	75036008000	SCREW PLUG CHAIN ADJ. 07	1
16	0603202702	CU SEAL-RING 20X27X1	1
18	77036003000	CHAIN ADJUSTER HYD. 05	1
19	75036002000	TENSIONER RAIL 07	1
20	75036018000	SECURING GUIDE 07	1
21	75036001000	GUIDE RAIL 07	1
22	75036018050	SUPPORTING SLEEVE 07	2
23	0015060300	HH COLLAR SCREW M 6X30 SW=8	2
24	75036014000	TIMING PULLEY 07	1
25	0471300151	CIRCLIP DIN0471-30X1,5 NIRO	1
26	0770180020	O-RING 18,00X2,00 NBR 70	1

077503620 / C077623620

* NEW PART

X AS REQUIRED

CYLINDER HEAD

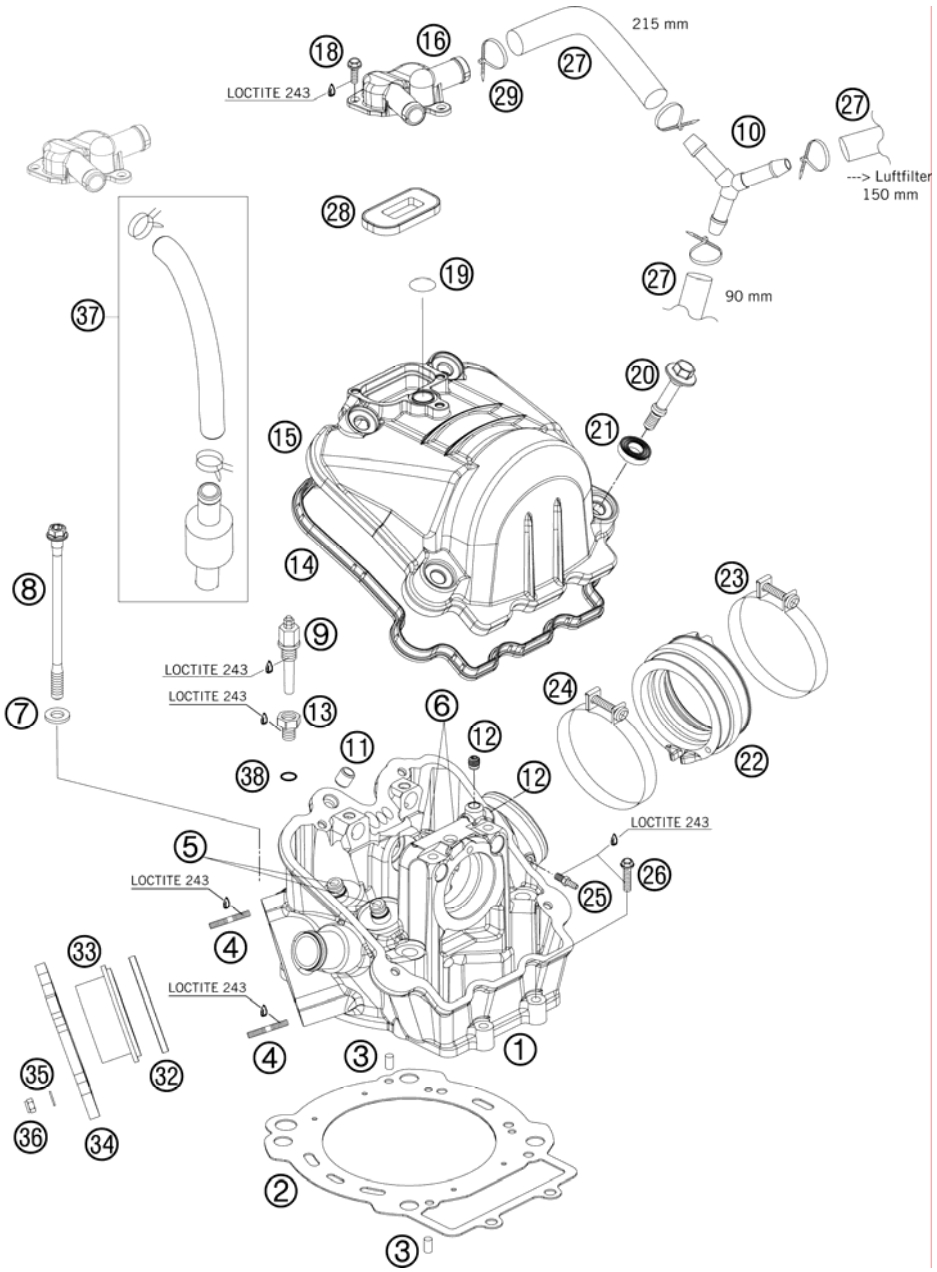

FIG	PART NUMBER	DESCRIPTION	QTY
1	75036020000	CYLINDER HEAD CPL. 05	1
2	75030036000	CYLINDER HEAD GASKET 07	1
3	0474050080	GROOVED PIN DIN1474 5X8	2
4	0835080256	STUD DIN0835-M 8X25 10.9	2
5	60036026100	VALVE GIUDE OUTLET '05	2
6	60036025100	VALVE GIUDE INDUCTION '05	2
7	60036078050	SHIM 10,2X19X1,5MM 05	4
8	75036079000	CYLINDERHEAD SCREW M10X168WS14	4
9	42011252000	TEMPERATURE SWITCH VDO	1
10	76230080000	Y-CONNECTOR 12/12/12	1
11	49030090000	DOWEL 9,8 X 7 X 10	1
12	59030296000	SCREW PLUG	4
13	42011252050	ADAPTER FOR TEMPERATURE SWITCH	1
14	75036053000	VALVE COVER GASKET 07	1
15	75036052000	VALVE COVER 07	1
16	75036052050	BREATHER COVER 07	1
18	0984050103	AH SCREW DIN6912 M5X10 8.8	3
19	0770150151	O-RING 15,00X1,50 VITON	1
20	75036055000	VALVE COVER SCREW 05	4
21	75036052010	DECOUPLING ELEMENT 07	4
22	75036045000	INTAKE BOOT 07	1
23	46005058000	HOSE CLAMP 40-60MM	1
24	51006027000	HOSE CLAMP 50-70MM	1
25	58336020090	VACUUM CONNECTION M 6X1	1
26	0015060203	HH COLLAR SCREW M 6X20 WS=8	2
27	58335025001	RADIATOR HOSE(REENFORCED)12X	x
28	60005026000	SLS-VALVE 03	1
29	44011076100	CABLE TIE 100/2,5MM BLACK	6
32	61005005000	EXHAUST GASKET 05	1
33	76205007051	EXHAUST FLANGE	1
34	76205007052	UNION FLANGE	1
35	0125080003	WASHER DIN0125-A 8,4	2
36	51010086100	SELF LOCKING NUT M 8 CU	2
37	76236024000	BREATHER CYLINDER HEAD	1
38	0770100020	O-RING 10,00X2,00 SILCONE	1

077623630 / C077623630

* NEW PART

X AS REQUIRED

LUBRICATING SYSTEM

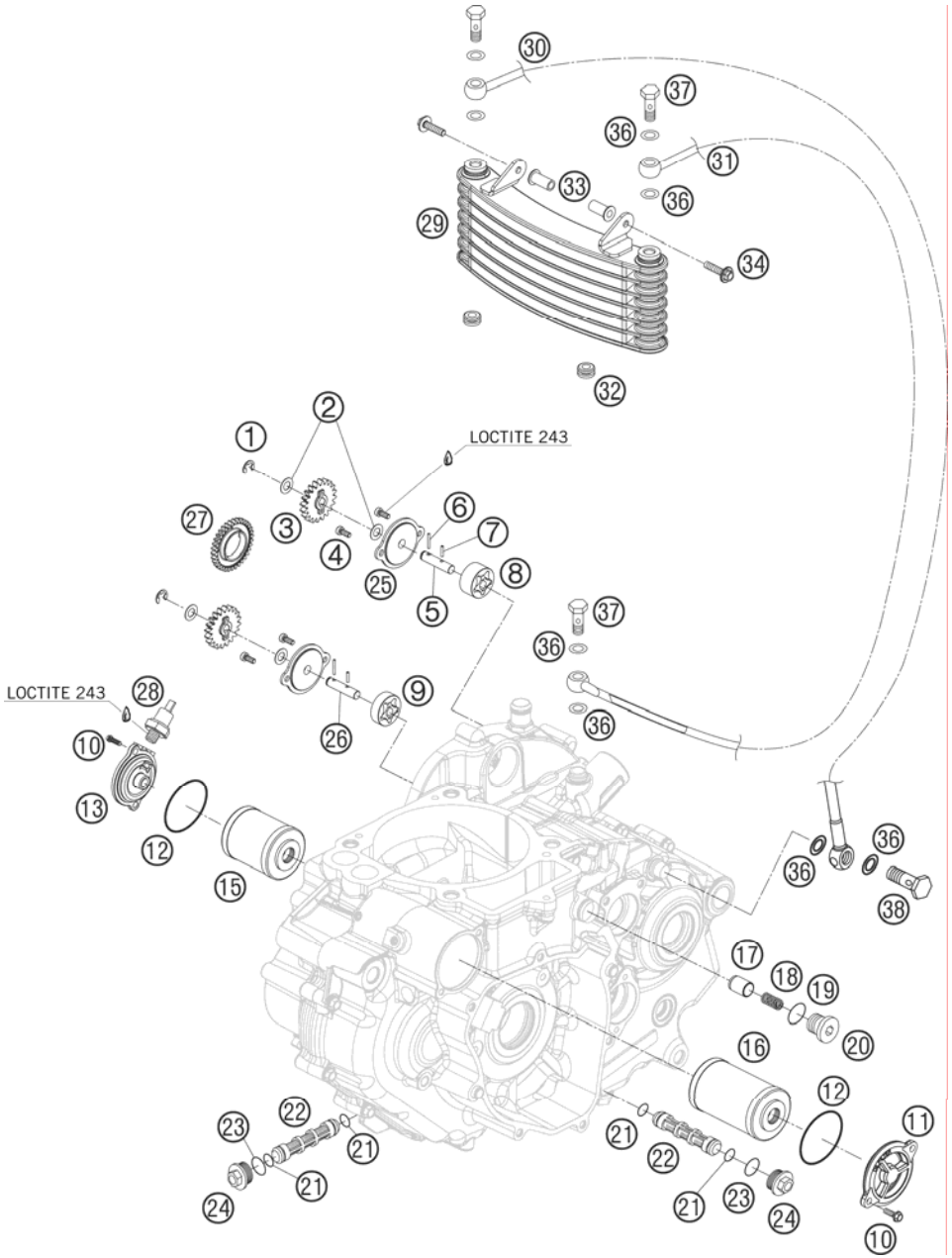

FIG	PART NUMBER	DESCRIPTION	QTY
1	0799060000	TAB WASHER DIN6799-RS 6,0	2
2	58038007755	STOP DISK 8,1 X 15 X 0,5	4
3	75038001020	OIL PUMP GEAR 20-T	2
4	0984050103	AH SCREW DIN6912 M5X10 8.8	4
5	75038002000	OIL PUMP SHAFT 07	1
6	0402251980	NEEDLEROL.DIN5402 NRA 2,5X19,8	2
7	0402251180	NEEDLE ROLLER DIN5402 2,5X11,8	2
8	77038011000	OILPUMP ROTOR 15MM G-164	1
9	59038011010	OILPUMP ROTOR CPL. 10MM G-73R	1
10	0015050163	HH COLLAR SCREW M 5X16 WS=8	4
11	75038041000	OIL FILTER COVER 07	1
12	0770039026	O-RING 39,34X2,62 NBR 70 SH	2
13	76238041000	OIL FILTER COVER 07	1
15	75038046000	OIL FILTER SHORT 07	1
16	77038005000	OIL FILTER 06	1
17	58038028000	VALVE PISTON D=10MM	1
18	58538023000	OIL PRES.SPRING 5 BAR RED 2001	1
19	58038022000	CU-SEAL RING DIN7603-12X18X1,5	1
20	0908120153	PLUG DIN0908-M12X1,5	1
21	07701250151	O-RING 12,5X1,5 VITON V75	4
22	59038016000	OIL SCREEN 15X83MM	2
23	0770020170	O-RING 17,17X1,78 GLO	2
24	59038017000	PLUG M20X1,5 WS=13	2
25	75038003000	OIL PUMP COVER 07	2
26	75038004000	OIL PUMP SHAFT 07	1
27	75032050001	OIL PUMP DRIVE WHEEL 07	1
28	58338091100	OILPRESSURE SWITCH 03	1
29	76238000000	OIL COOLER	1
30	76238034000	OIL PIPE ENGINE-COOLER 1035MM	1
31	76238035000	OIL PIPE COOLER-ENGINE 1000MM	1
32	31008060000	RUBBER SLEEVE D=8MM OPEN	2
33	76212090070	INSULATED SCREW JOINT M6	2
34	0014060203	HH COLLAR SCREW M 6X20 WS=8	2
36	0603100141	COPPER GASKET DIN7603-10X14X1	8
37	54313025000	HOLLOW SCREW M10 X 1	3
38	76238025000	HOLLOW SCREW M10 X 1	1

077623810 / C077623810

* NEW PART

X AS REQUIRED

IGNITION SYSTEM

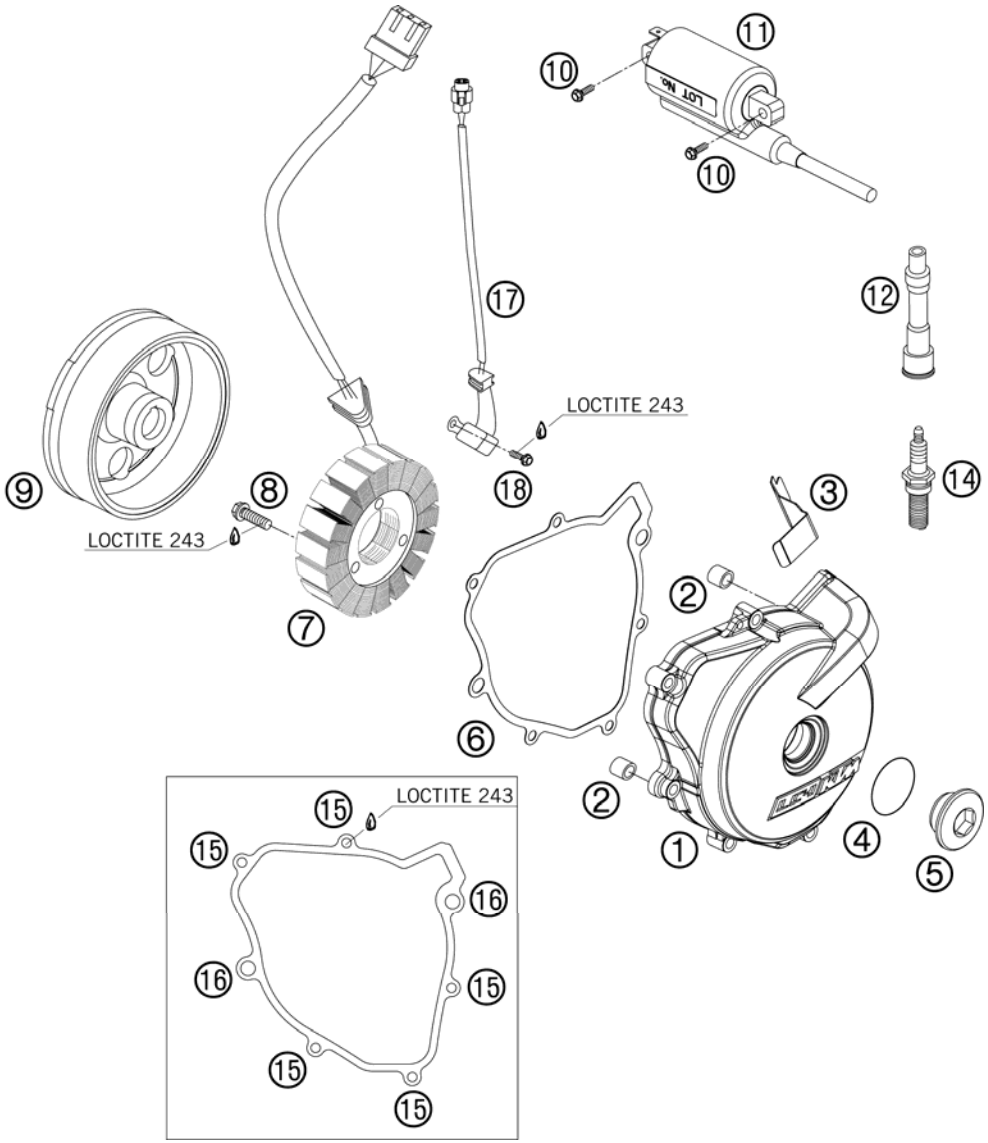

FIG	PART NUMBER	DESCRIPTION	QTY
1	75030002000	IGNITION COVER 07	1
2	49030090000	DOWEL 9,8 X 7 X 10	2
3	60039040020	CABLE SUPPORT GENERATOR 03	1
4	07700240251	O-RING 24X2,5 VITON	1
5	6003009400030	SCREW PLUG M24X1,5 PA 6.6	1
6	75030040000	IGNITI.COVER GASKET 07	1
7	75039004000	STATOR	1
8	0015060303	HH COLLAR SCREW M 6X30 SW=8	3
9	76239005000	FLYWHEEL	1
10	0015050163	HH COLLAR SCREW M 5X16 WS=8	2
11	59039006000	IGNITIONCOIL KOKUSAN 4K3-A/B	1
12	75039090000	SPARK PLUG CONNECT.	1
14	75039093000	SPARK PLUG M12X1,25 LKAR8AI-9	1
15	0015060253	HH COLLAR SCREW M 6X25 WS=8	5
16	0015060303	HH COLLAR SCREW M 6X30 SW=8	2
17	75039034000	PULSER COIL	1
18	0015060163	HH COLLAR SCREW M 6X16 WS=8	2

077623910 / C077623910

* NEW PART

X AS REQUIRED

ELECTRIC STARTER

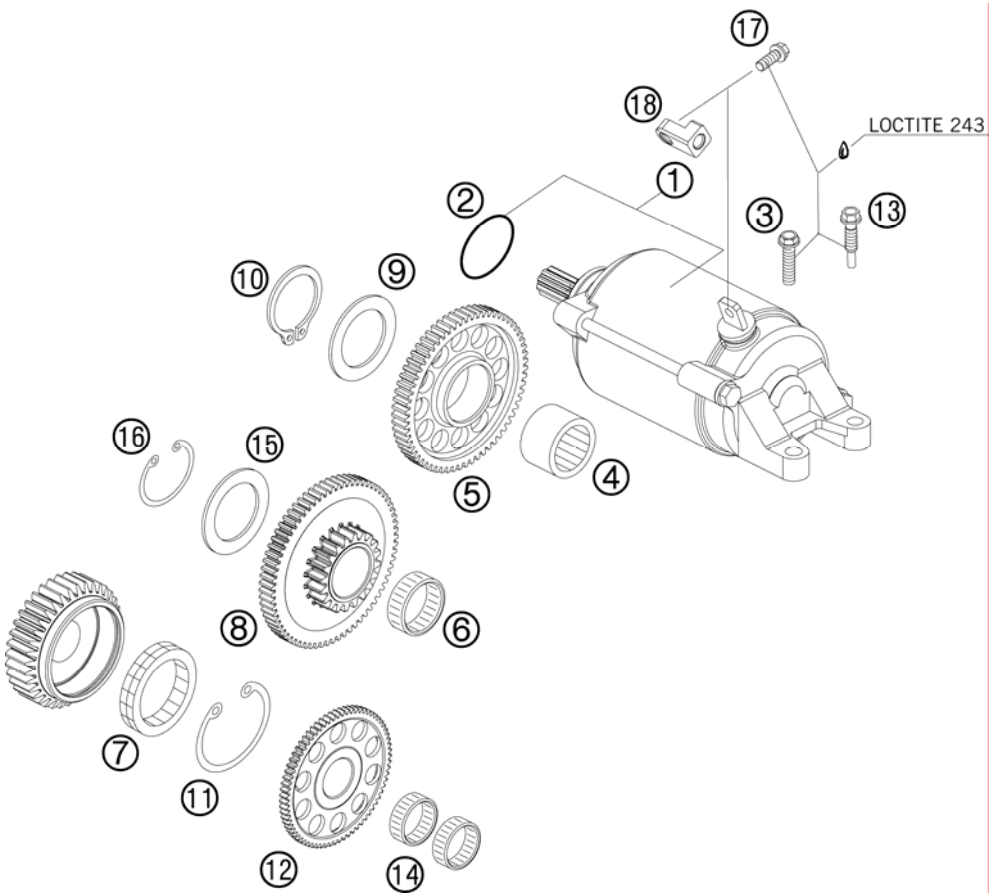

FIG	PART NUMBER	DESCRIPTION	QTY
1	75040001000	E-STARTER ENGINE CPL. 07	1
2	0770335030	O-RING 33,5X3 VITON	1
3	0015060203	HH COLLAR SCREW M 6X20 WS=8	1
4	0618172312	NEEDLE SLEEVE HK 1712 17X23X12	1
5	75040022000	INTERMEDIATE GEAR	1
6	0405172117	NEEDLE BEARING K17X21X17	1
7	75040026000	FREE WHEEL	1
8	75040015000	TORQUE LIMITER 07	1
9	54633090000	STOP DISK 17,2X25X1	1
10	0471170010	CIRCLIP DIN0471-17X1	1
11	0472056200	CIRCLIP DIN0472 J56	1
12	75040020000	FREEWHEEL GEAR 07	1
13	76240030000	HH COLLAR SCREW M 6X30	1
14	0405263013	NEEDLE BEAR. K 26X30X13	2
15	75040015007	STOP DISK 17,2X22X1	1
16	0471170100	CIRCLIP DIN 0471-17X1	1
17	0015060083	HH COLLAR SCREW M 6X8 WS=8	1
18	76211059010	STARTER CABLE LUG	1

077624010 / C077624010

* NEW PART

X AS REQUIRED

KTM Group Partner

3CM088520HEN

Art.Nr.: 3CM088520HEN 7/2007

KTM-Sportmotorcycle AG

A-5230 Mattighofen

www.ktm.at